MODEL 44-65
VIBRATORY
DRIVER/EXTRACTOR

OPERATING AND MAINTENANCE MANUAL

# J & M MODEL 44-65

VIBRATORY PILE DRIVER/EXTRACTOR

WITH MODEL 650 POWER PACK

Serial Numbers: 186501 & Above

OM-44-65/650-0896

J&M Foundation Equipment, LLC
60 38th Street, Pittsburgh, PA 15201
Phone: 412-682-4553 Fax: 412-682-4511
E-Mail: info@jandm-usa.com

# PREFACE

This manual was prepared to acquaint the owner, operator and serviceman with the operation and maintenance of the vibratory driver/extractor. We suggest that this manual be carefully studied before operating or undertaking any maintenance work on the unit.

This manual is organized into two major sections.

The first contains routine OPERATING INSTRUCTIONS for the unit and includes a GENERAL DESCRIPTION section, which presents a basic explanation of the driver/extractor and its specifications. The MAINTENANCE AND ADJUSTMENT section should be referred to periodically for normal servicing of equipment. All machines and equipment require systematic, periodic inspection and maintenance if they are to perform satisfactorily over a long period of time. The driver/extractor is primarily a vibrating machine and if not given the best of care, or if improperly used and maintained, it is self-destructive. Therefore, the unit should receive the same care and maintenance as other high quality construction equipment.

The second section contains information for ordering spare parts and includes both a PARTS LIST and a pictorial drawing of the assembly for easier determination of the required part. Refer to the ORDERING PARTS section of the PARTS LIST for more specific procedures regarding parts ordering. Adherence to the listed procedures will insure receipt of the required part(s) with the minimal amount of delay or error.

MODEL 44-65
VIBRATORY
DRIVER/EXTRACTOR

## WARRANTY

### J&M FOUNDATION EQUIPMENT STANDARD WARRANTY

J&M Foundation Equipment (J&M) warrants new products sold by it to be free from defects in material or workmanship for a period of 90 days after date of delivery to the first user and subject to the following conditions:

J&M's obligation and liability under this WARRANTY is expressly limited to repairing or replacing, at J&Ms option, any parts which appear to J&M, upon inspection, to have been defective in material or workmanship. Such parts shall be provided at no cost to the user, at the business establishment of J&M or the authorized J&M distributor of the product, during regular working hours. This WARRANTY shall not apply to component parts or accessories of products not manufactured by J&M and which may carry the warranty of the manufacturer thereof, or to normal maintenance (such as engine tune-up) or to normal maintenance parts (such as oil filters). Replacement or repair parts installed in the product covered by this WARRANTY are warranted only for the remainder of the warranty, as if such parts were original components of said product. J&M COMPANY MAKES NO OTHER WARRANTY, EXPRESS OR IMPLIED, AND MAKES NO WARRANTY OF MERCHANTABILITY OR FITNESS, FOR ANY PARTICULAR PURPOSE.

J&M's obligation under this WARRANTY shall not include any transportation charges, cost of installation, duty, taxes or any other charges whatsoever, or any liability for direct, indirect, incidental, or consequential damage of delay. If requested by J&M, products or parts for which a warranty claim is made are to be returned, transportation prepaid to J&M. Any improper use, including operation after discovery of defective of worn parts, operation beyond rated capacity, substitution of parts not approved by J&M or any alteration or repair by others in such manner as in J&M's judgment affects the product materially and adversely shall void this WARRANTY.

NO EMPLOYEE OR REPRESENTATIVE IS AUTHORIZED TO CHANGE THIS WARRANTY IN ANY WAY OR GRANT ANY OTHER WARRANTY UNLESS SUCH CHANGE IS MADE IN WRITING AND SIGNED BY AN OFFICER OF J&M.

**MODEL 44-65**
**VIBRATORY**
**DRIVER/EXTRACTOR**

## TABLE OF CONTENTS

### OPERATING INSTRUCTIONS

## TABLE OF CONTENTS

### OPERATING INSTRUCTIONS (CONTINUED)



### PARTS LIST

# OPERATING INSTRUCTIONS

## I. GENERAL DESCRIPTION

### A. GENERAL

The J&MModel 44 is a variable-frequency vibratory pile driver/extractor designed to drive and extract sheet, pipe, timber and concrete piles, caissons, H-beams, I-beams and wide-flange beams.

The Model 44 operates in a frequency range of 750 to 1650 vibrations per minute to provide maximum pile penetration rates in a wide variety of soils. The unit has an eccentric moment of 4400 inch-pounds (50.7kg-M) and produces a maximum amplitude of 1.2 inch (30mm).

The vibratory driver unit consists of two major components - (1) the vibrator with attached clamp and (2) the power unit with remote control pendant.

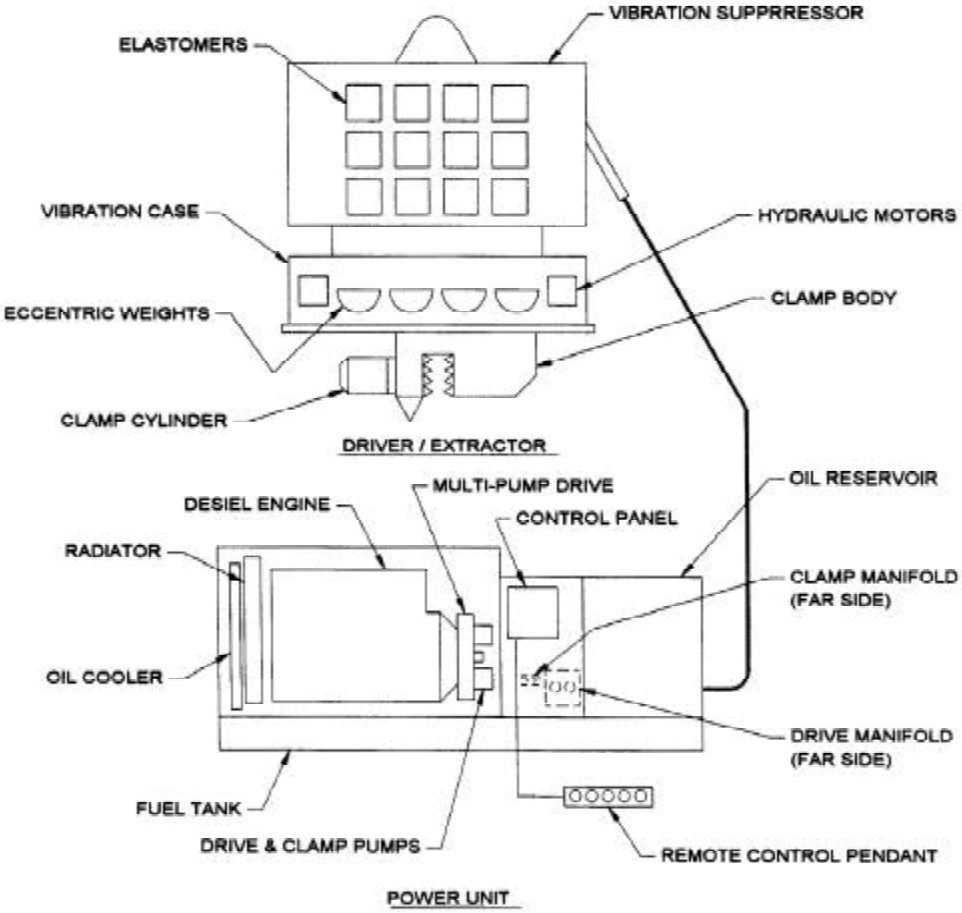

I. GENERAL DESCRIPTION

B. VIBRATOR

The vibrator consists of two major components; The vibration case and the vibration suppressor. The vibration case contains four eccentric weights which rotate in a vertical plane to create vibration. The eccentric weights are driven by two hydraulic motors. The vibration suppressor contains a minimum of 24 rubber elastomers to isolate the vibration case from the crane line. The suppressor is designed for a maximum line pull of 80 tons (712kN) during extraction.

C. HYDRAULIC CLAMP

The hydraulic clamp attaches the vibrator to the pile. Four types of hydraulic clamps are available for the Model 44 vibrator. The Model 196 universal clamp will drive and extract most types of sheet piling, 14" (355mm) H-beams, and wide flange beams. The Model 122 caisson clamps are used in pairs with either the 7-foot (2.13m) or 11-foot (3.35m) caisson beam to drive and extract pipe from 22.25" (565mm)ID to 129.25" (3283mm)OD. The Model 50 wood pile clamp is designed to drive and extract wood piles from 10" (254mm) OD to 18" (457mm)OD. The model 165 concrete pile clamp will extract square concrete piles from 18" (457mm) to 24" (610mm).

D. POWER UNIT

The Model 44 vibrator is powered by the J&M Model 650 power pack. The 650 power pack is powered by a Caterpillar 3412DIT diesel engine. The engine develops 650 horsepower (485kW) at 2100 RPM, and is mounted on a tubular sub-base which serves as a fuel tank. The Power Unit and Vibrator are operated from the control panel or remote control pendant. Hydraulic oil is stored in the reservoir. Oil cooling is accomplished by a air to oil heat exchanger mounted in front of the engine radiator. All of the above components are contained in a sheet metal enclosure, with lockable doors, and a central lifting bale.

E. HOSES

Three hydraulic hoses, 150 feet (45.7m) in length, connect the power unit to the hydraulic motors on the vibrator. Two other hydraulic hoses run from the power unit to the hydraulic clamp.

F. REMOTE-CONTROL PENDANT

The vibrator is operated by the hand-held remote control pendant. The pendant has 1 palm button, 2 switches and 2 push buttons, 1 with a light. The red palm button (EMERGENCY STOP) shuts down diesel engine instantly in the event of an emergency. The (OPEN CLOSE) switch opens and closes the hydraulic clamp. The light in the (START) button indicates that adequate clamping pressure exists. The (START) button starts vibration. The (STOP) button stops vibration. The (THROTTLE) switch raises and lowers the diesel engine speed. Note: Controls are duplicated on the control panel for use if the pendant becomes damaged. (See pg.III-6, Section E-g)

I. GENERAL DESCRIPTION

G. SPECIFICATIONS

1. Constant improvement and engineering progress make it necessary that we reserve the right to make specification changes without notice.

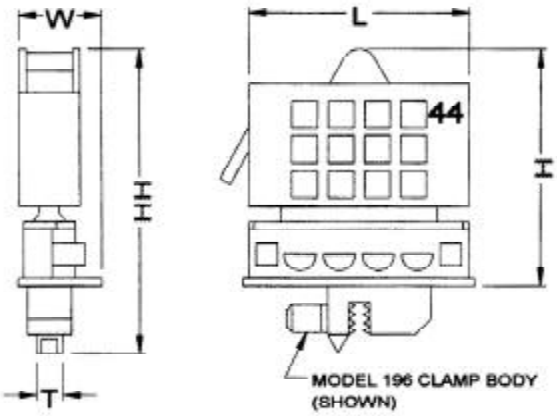


2. MODEL 44-65 VIBRATOR
(with hydraulic clamp)

Type ..... Hydraulic
Eccentric Moment ..... 4400 In-lbs (50.7kg-M)
Frequency ..... 750-1650 VPM
Amplitude ..... 1.2 in. (30mm)
Pile Clamping Force ..... 196 Tons(1744kN)
Max. Line Pull for
Extraction ..... 80 Tons (712kN)
Suspended Weight with 196 Clamp and
half hoses ..... 15,925 lbs. (7223kg)
Length **[L]** ..... 97 in. (246cm)
Width **[W]** ..... 21 in. (55cm)
Throat Width **[T]** ..... 14.25 in. (36cm)
Height with Clamp **[HH]** ..... 121 in. (307cm)
Height without clamp **[H]** ..... 83 in. (211cm)

3. MODEL 650 POWER UNIT

Type ..... Diesel
Engine ..... CAT 3412DIT
Horsepower (2100 RPM) ..... 650 (485kW)
Weight ..... 21,100 lbs. (9571kg)
Length **[ll]** ..... 186 in. (472cm)
Width **[ww]** ..... 66 in. (168cm)
Height **[hh]** ..... 100 in. (254cm)

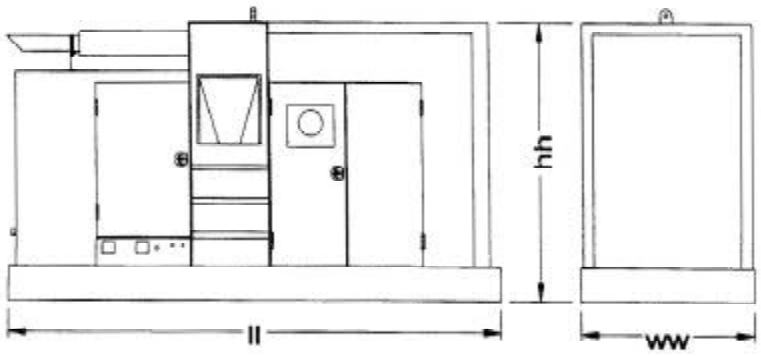

## II. PREPARATION FOR OPERATION

### A. GENERAL

When unloading and unpacking the vibratory driver, use extreme care. For your protection, make a thorough inspection of the unit immediately on delivery. In case of any damage or shortage, notify the transit agent at once and have the delivering carrier make a notation on the freight bill.

### B. SAFETY PRECAUTIONS

Safety is basically common sense. There are standard safety rules, but each situation has its own peculiarities which cannot always be covered by rules. Therefore, your experience and common sense will be your best guide to safety. Be ever watchful for safety hazards and correct deficiencies promptly.

Use the following safety precautions as a general guide to safe operations:

1. When operating in a closed area, pipe exhaust fumes outside. Continued breathing of exhaust fumes may be fatal.
2. When servicing batteries, do not smoke or use an open flame in the vicinity. Batteries generate explosive gas during charging. There must be proper ventilation when charging batteries.
3. When filling fuel tank, do not smoke or use open flame in the vicinity.
4. Never adjust or repair the unit while it is in operation.
5. Never operate diesel engine with governor linkage disconnected.
6. Remove all tools and electrical cords before starting engine.
7. Store oily rags in containers.
8. Never store flammable liquids near the engine.

**REMEMBER SAFETY IS EVERYONE'S BUSINESS.**

## II. PREPARATION FOR OPERATION

### C. RIGGING OF VIBRATOR

A steel wire rope sling must be connected to the lifting pin of the vibration suppressor. The required strength of this sling depends on the capacity of the crane and the work to be carried out. A safety factor of five is recommended, (5 x 80 ton). Several turns of a smaller diameter cable will usually last longer than one turn of a larger diameter cable. Inspect daily for damage to sling or wire rope clamps.

### D. CONNECTION OF HYDRAULIC CLAMP

The vibrator is usually shipped with the hydraulic clamp already attached.

If the clamp is not attached, it will be necessary to attach it to the bottom of the vibrator. Orient the clamp to the vibrator with the clamp cylinder end (movable jaw) at the same end of the vibrator at which the hose chute is mounted. All eleven (1.5-6UNCx5.00) bolts must be in place and torqued to approximately 2800 ft-lbs. (387 Kg-M)

For caisson work, the caisson beam must be attached to the bottom of the vibrator and tightened as above. The 7 foot caisson beam uses (1.5-6UNCx8.00) bolts and the 11 foot caisson beam uses (1.5-6UNCx5.00) bolts. After attaching the beam, slide the clamps into position.

II. PREPARATION FOR OPERATION

E. CONNECTION OF HYDRAULIC HOSES

1. Connection of hoses at power unit.

a. The vibrator and hydraulic clamp are connected to the power unit by five hydraulic hoses (Fig. 1).

CAUTION: The power unit must be shut down during connection of the hydraulic hoses.

b. The hoses connect to the power unit with quick-disconnect couplers. The hose couplers are arranged to insure correct connections at the power unit. See the diagram (Fig. 1) below for correct hose connection.

c. Clean couplers with a lint-free cloth before making connections.

d. Make sure that the couplers are fully run up. They should be fully hand tight. Do not use wrenches to tighten.

e. Tighten the set screws on the two large couplers.

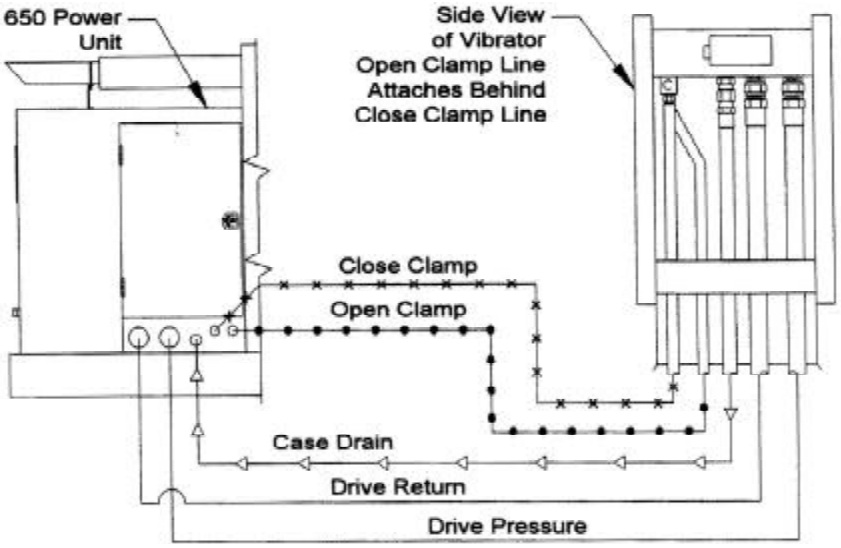


(Fig. 1)

II. PREPARATION FOR OPERATION

E. CONNECTION OF HYDRAULIC HOSES (CONTINUED)

2. Connection of hoses at vibrator.

a. The vibrator is usually shipped with the hoses attached to the vibrator. If the hoses have been shipped separately, they must be connected in the field. Fig. 1 on the previous page shows the correct arrangement of the 5 hoses connecting the power unit to the vibrator.

CAUTION: Starting the vibrator with the hoses reversed will result in low power or possible ruptured hoses.

b. The vibrator is usually shipped with the hydraulic clamp and hoses attached. If the clamp has been shipped separately, the two hoses connecting the clamp to the vibrator must be connected. Fig. 2 shows the correct arrangement of these hoses. For caisson clamps, four hoses must be connected. The two connections on the opposite end of the vibrator are reversed from the positions shown on the drawing below. Both ends are stamped with an "O" and a "C" to insure correct connection. The clamp connections are the same.

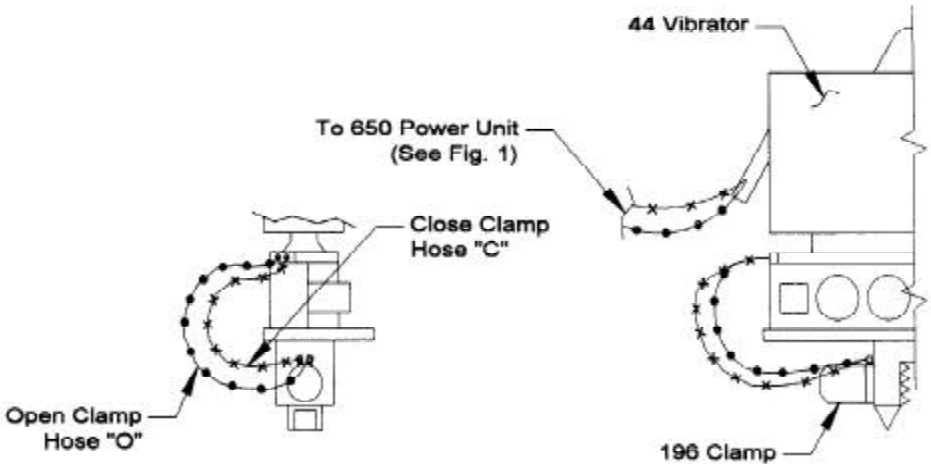


(Fig. 2)

II. PREPARATION FOR OPERATION

F. BLEEDING HYDRAULIC CLAMP HOSES

1. When the vibrator and hydraulic clamp are shipped with all hoses attached (between vibrator and clamp and five main hoses connected to the vibrator), the hoses are usually full of oil and may be used immediately. However, if any of the clamp hoses are connected at the job site or if air is present in hoses, they must be bled prior to operation.

2. Read SECTION III - OPERATING INSTRUCTIONS.

3. Start and warm up the diesel engine in accordance with SECTION III-C - STARTING AND WARMING UP ENGINE.

4. With the engine warmed-up and running at 1200 RPM, loosen the close-clamp line at the hydraulic clamp. Turn the clamp switch on the remote-control pendant to CLOSE. Wait until oil flows from the connection at the hydraulic clamp. When oil flows without air, tighten the connection.

5. After the line has been bled, alternately turn the clamp switch to CLOSE and OPEN to insure that the clamp is working properly. It may be necessary to bleed the line more than once. The open-clamp line may also require bleeding.

G. FILLING VIBRATOR PRESSURE HOSE

1. The vibrator is usually shipped with the vibrator hydraulic hoses full of oil and the unit may be used immediately. However, if the pressure hose has been removed from the vibrator, the hose should be allowed to fill with hydraulic oil prior to fullspeed operation.

2. Read SECTION III - OPERATING INSTRUCTIONS.

3. Start and warm up the diesel engine in accordance with SECTION III-C - STARTING AND WARMING UP ENGINE.

4. Turn the VIBRO-AUGER switch (inside Control Box) to the AUGER position.

5. With the diesel engine running at 1800 RPM, hold the CLAMP switch in the OPEN-REV position for 5 minutes. The Vibrator hoses will fill with oil.

6. Return the VIBRO-AUGER switch to the VIBRO position before proceeding.

III. OPERATING INSTRUCTIONS

CONTROL PANEL WITH REMOTE-CONTROL PENDANT

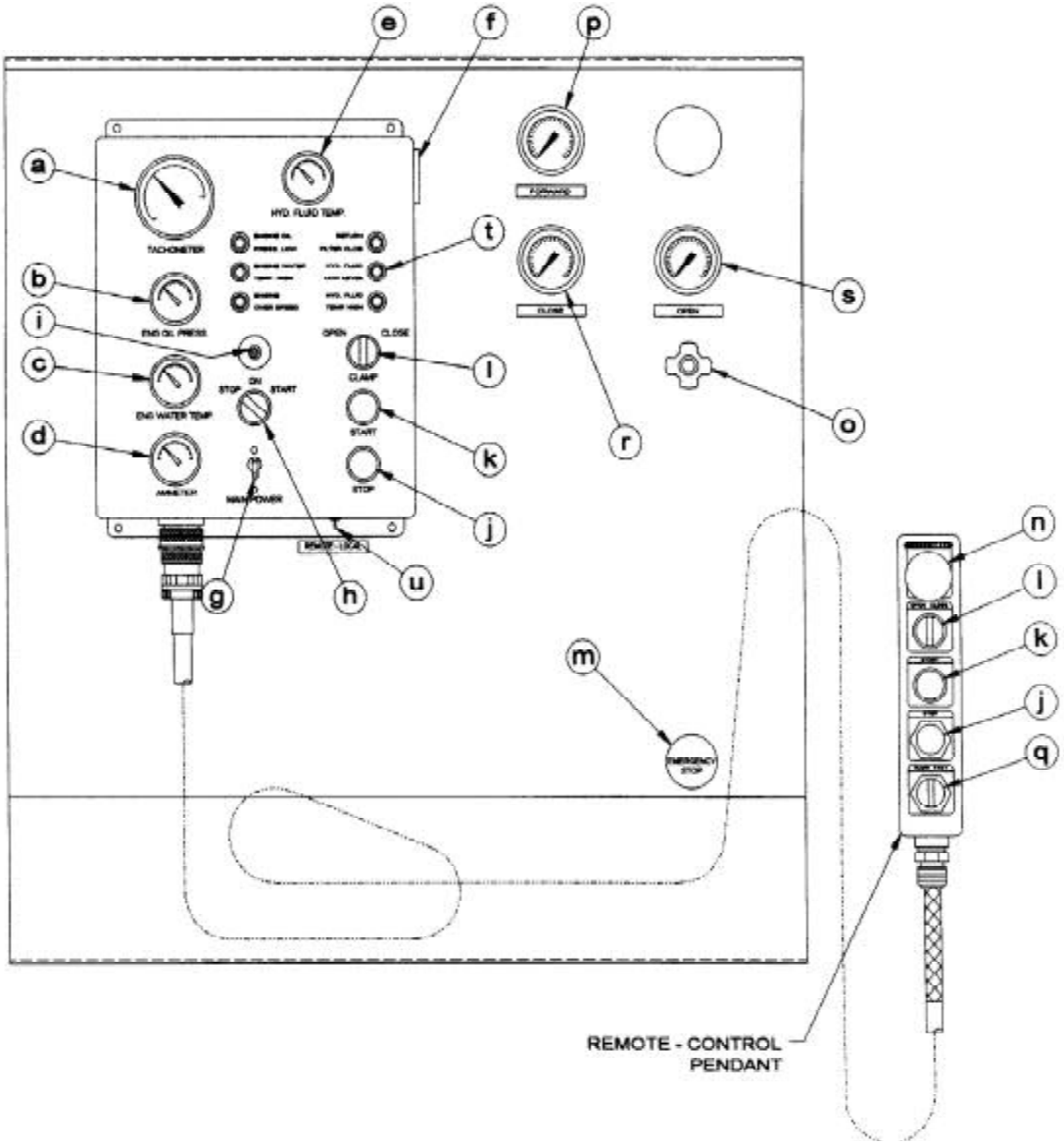


(Fig. 1)

III. OPERATING INSTRUCTIONS

A. COMPLETION OF SET-UP AND MAINTENANCE

1. Complete all preparation as described in Section II.

2. Read Section IV - MAINTENANCE AND ADJUSTMENTS and perform any required maintenance.

B. CONTROL PANEL

1. The control box (Fig. 1, page III-1) at the side of the power pack contains the controls and gages for the diesel engine and the vibrator and the OPERATION AND MAINTENANCE INSTRUCTIONS.

2. Control panel contains the following controls, gages and shutdown indicators.

   a. Engine Tachometer
   b. Engine Oil Pressure Switch Gage
   c. Engine Water Temp Switch Gage
   d. Engine Ammeter
   e. Hydraulic Oil Temperature Switch Gage
   f. Engine Hour Meter
   g. Main Power Switch - ON-OFF Switch & Circuit Breaker
   h. Engine - ON-OFF-START - Switch for Diesel Engine
   i. Engine Shutdown Reset Button - over ride button for engine shutdown switch. Must be held in until oil pressure exceeds 30 PSI.
   j. Vibrator Stop Button
   k. Vibrator Start Button - with clamp light.
   l. Clamp Switch - open - close.
   m. Emergency Stop - pull out to stop engine.
   n. Emergency Stop - push to stop engine.
   o. Engine Throttle (Manual)
   p. Pressure Gage - Forward
   q. Engine Throttle (Remote Electric)
   r. Pressure Gage - Close Clamp
   s. Pressure Gage - Open Clamp
   t. Shutdown indicator lights (6) See notes below.
   u. Remote - Local Switch

Notes: 1. Engine Oil Pressure shutdown indicator - comes on if engine has been shut down automatically due to engine oil pressure being low.
2. Engine Water Temperature shutdown - comes on if engine has been shut down automatically due to engine water overheating.

III. OPERATING INSTRUCTIONS

B. CONTROL PANEL (CONTINUED)

3. Engine Overspeed shutdown indicator - comes on if engine has been shut down automatically due to the engine being run at excessively high RPM.
4. Filter Clogged shutdown indicator - comes on if engine has been shut down automatically due to the hydraulic oil return filter being clogged.
5. Hydraulic Oil Level Low shutdown indicator comes on if engine has been shut down automatically due to low hydraulic oil level in the reservoir.
6. Hydraulic Oil Temperature High shutdown indicator - comes on if engine has been shut down automatically due to high hydraulic oil temperature.

3. The Operating & Maintenance Instructions, on the control box door, are there as reminders only. They are not intended to substitute for a through understanding of the Operators Manual.

III. OPERATING INSTRUCTIONS

C. STARTING AND WARMING UP ENGINE

1. Before starting the engine, read the CATERPILLAR OPERATION GUIDE carefully. Follow the engine starting, operating and maintenance procedures in that manual.

2. The diesel engine should not be started if the temperature of the hydraulic oil is below 0°F (-18°C). If ambient temperatures below 0°F (-18°C) are anticipated, an immersion heater for the hydraulic oil is available. Consult J&M for details.

3. Turn the MAIN POWER switch on the control panel to on.

4. Pull out the ENGINE THROTTLE about half way. Pressing the button on the end of the throttle allows rapid throttle adjustment. Turning the throttle allows fine adjustment. Be sure the EMERGENCY STOP knob is fully pushed in.

5. Press and hold the SHUTDOWN RESET. Turn the ENGINE START switch to START. Hold SHUTDOWN RESET in until engine oil pressure exceeds 30 PSI (2 BAR).

6. Adjust the throttle until the engine is running at 1500 RPM and allow engine to warm up for five minutes. After the engine is warmed up, adjust throttle so engine runs at 2300 RPM's under no load. The engine should hold 2100 RPM's under load.

7. Allow the temperature of the hydraulic oil to come up to at least 30°F (-1°C) before starting the vibrator.

D. WARMING HYDRAULIC OIL

1. The vibrator should not be operated at full speed if the temperature of the hydraulic oil is below 60°F (16°C).

2. If temperature is below 60°F (16°C), set the engine at 1500 RPM and press the START button on the control pendant to start the vibrator. Allow the vibrator to run until the temperature of the hydraulic oil exceeds 60°F (16°C).

III. OPERATING INSTRUCTIONS

D. WARMING HYDRAULIC OIL (CONTINUED)

3. When the engine is warmed up and hydraulic oil temperature is at least 60°F (16°C), full speed operation may begin.

4. The hydraulic oil temperature should be monitored with the Hydraulic Temperature Oil Switch Gage. Oil temperature should never exceed 160°F (71°C). The engine will automatically shut down if oil temperature exceeds 160°F (71°C).

CAUTION: Do not operate the vibrator if hydraulic oil temperature exceeds 160°F (71°C) as this may damage hydraulic components.

E. OPERATION OF REMOTE-CONTROL PENDANT

1. The operation of the vibratory driver is controlled by the remote-control pendant. The pendant is connected to the control cabinet with 50 feet (15m) of electrical cable to permit operation from any advantageous position near the vibrator.

2. The pendant has an Emergency Stop palm button, two control buttons, one with an indicator light, and two switches.

a. To Clamp to Pile:

Position vibratory driver on pile. Turn the clamp switch on the pendant to CLOSE. The CLAMP light (Start Button) on the pendant will illuminate when the hydraulic clamp has achieved adequate pressure to permit vibration to begin. The light should normally come on in a few seconds.

b. To Start Vibration:

Press the START button (lighted).

CAUTION: Do not press the START button until the CLAMP light comes on indicating adequate clamping pressure.

III. OPERATING INSTRUCTIONS

E. OPERATION OF REMOTE-CONTROL PENDANT (CONTINUED)

c. To Stop Vibration:

Press the STOP button.
The vibrator will stop vibration in a few seconds. If the STOP button does not stop the vibrator, pressing the Emergency Stop button will shut down the Power Unit and the vibrator will stop.

d. To unclamp from pile.

Turn the CLAMP switch to OPEN to release the hydraulic clamp so that the vibrator can be removed from the pile. Hold the CLAMP switch in the OPEN position for approximately 10 seconds or until a visual check shows the jaws to be fully open. An electrical interlock prevents the jaw from opening if the Stop button has not been pressed.

CAUTION: Do not turn the switch to OPEN until a visual check indicates that vibration has stopped.

e. Remote Electric Throttle

Momentarily turning the electric throttle switch to the FAST position will increase engine speed (RPM). Turning this switch to the SLOW position will reduce engine speed.

f. Emergency Stop Palm Button

Pressing the EMERGENCY STOP button will stop the diesel engine and all vibrator functions will cease.

g. If the remote- control pendant is damaged or the pendant line is cut, you may still operate the vibrator by using the control switches on the control panel. (See Fig. 1 on page III-1 items J, K, L). To activate these switches, find the toggle switch on the bottom of the control panel, labeled "REMOTE-LOCAL". Turn the switch (item U) to LOCAL and the switches on the control panel will be functional, and the remote control pendant will be disabled.
(NOTE: The EMERGENCY STOP button on the pendant is not disabled during "LOCAL" operation)

h. Radio Remote Control: A Radio frequency Remote Control Unit is available from J&M for the Model 44-65. This unit allows the operator flexibility to control the Vibrator at greater distances from the Power Unit without the inconvenience of the electrical cable. Contact J&M for information and operating instructions.

III. OPERATING INSTRUCTIONS

F. CHANGING FREQUENCY

1. In order to provide maximum flexibility in achieving optimum pile penetration and extraction rates, the frequency of the vibratory driver is adjustable.

2. The frequency can be varied from 750 to 1650 vibrations per minute by changing engine speed. Engine speed is changed with the ENGINE THROTTLE on the control panel or with the remote electric throttle (FAST / SLOW) switch on the pendant. Vibration frequency corresponds approximately to engine speed according to the table shown below.

| ENGINE RPM | VIBRATOR VPM |
|---|---|
| 2100 | 1650 |
| 1850 | 1400 |
| 1575 | 1200 |
| 1325 | 1000 |
| 1000 | 750 |

G. SHUT DOWN

1. Stop the vibrator.

2. Allow the diesel engine to run for five minutes at 1100 RPM.

3. Reduce engine speed to idle for about thirty seconds.

4. Stop the engine by turning the ENGINE START switch to OFF.

5. Turn MAIN POWER switch to OFF.

6. Check engine crankcase oil level while power unit is setting level.

7. CAUTION: If the diesel engine is shut down while the vibrator is clamped to a pile, the clamp check valve will keep the vibrator clamped to the pile. However, system leakage could result in a loss of clamp pressure over time. Therefore, it is not recommended to leave the vibrator clamped to a pile when the diesel engine is not running.

# IV. MAINTENANCE AND ADJUSTMENTS

## A. GENERAL

Preventive maintenance includes normal servicing that will keep the vibratory driver, clamp and power unit in peak operating condition and prevent unnecessary trouble from developing. This servicing consists of periodic lubrication and inspection of the moving parts and accessories of the unit.

Lubrication is an essential part of preventative maintenance, controlling to a great extent the useful life of the unit. Different lubricants are needed and some components in the unit require more frequent lubrication than others. Therefore, it is important that the instructions regarding types of lubricants and frequency of their applications be closely followed.

To prevent minor irregularities from developing into serious conditions that might involve shut-down and major repair, several other services or inspections are recommended for the same intervals as the periodic lubrications. The purpose of these services or inspections is to assure the uninterrupted operation of the unit.

Thoroughly clean all lubrication fittings, caps, filler and level plugs and their surrounding surfaces before servicing. Prevent dirt from entering with lubricants and coolants. The intervals given in the schedule are based on normal operation. Perform these services, inspections, etc., more often as needed for operation under abnormal or severe conditions.

## B. DAILY

1. Check the entire unit prior to and during set-up each day or at the beginning of each shift.

2. Prior to starting the power unit or at the beginning of each shift, check the following items:

   a. Visibly inspect all bolts, nuts and screws including the bolts fastening the hydraulic clamp to the vibration case to insure they are tight. IMPORTANT: Vibration loosens bolts. Check carefully.
   b. Tighten bolts holding gripping jaws in hydraulic clamp.
   c. Grease plunger in hydraulic clamp with any good multi-purpose grease.
   d. Check the oil level in the vibration case and add oil if required. The oil level should be in the middle of the sight glass. Change oil if milky or contaminated. DO NOT OVERFILL
   e. Check the oil level in the hydraulic reservoir and refill if necessary.

   CAUTION: It is absolutely imperative that no dirt or other impurities be permitted to contaminate the hydraulic oil. Any contamination will drastically shorten the life of the high-pressure hydraulic system.

IV. MAINTENANCE AND ADJUSTMENTS

B. DAILY (CONTINUED)

f. Visually check all hoses for signs of damage or cuts that might cause hose failure during operation. Be sure all connections are tight, especially the quick-disconnect couplers.
g. Visually inspect all suppressor elastomers.
h. Electrical components need no maintenance except periodic wiping with a clean, dry, lint-free cloth to remove dust.
i. Perform all daily (10 Service Meter Units) maintenance checks and lubrication in the CATERPILLAR OPERATION GUIDE. For the ICE Model 650 power unit, the HOUR METER on the control panel may be considered to read Caterpillar's "Service Meter Units".

3. After engine start-up, check the following:

a. Check all hydraulic hoses for leaks. Make sure they hang freely with no kinks.
b. Check both pumps and all hydraulic manifolds for leaks.
c. Check the filter indicators. The filter indicators on the power unit must be checked with the diesel engine running at full speed.

C. 125 HOURS (125 Service Meter Units)

1. Every 125 hours drain and refill the vibration case with new lubricant.

2. Perform all maintenance checks and lubrication indicated in the Caterpillar OPERATION GUIDE.

3. After the first 100 hours, drain and replace the lubricant in the multi-pump drive, thereafter change every six months or 2000 hours, which ever comes first.

D. 250, 500 HOURS and Other

1. See Caterpillar OPERATION GUIDE.

E. ANNUALLY

1. Have the hydraulic oil tested by a local hydraulic service center. Replace if required.

2. See Caterpillar OPERATION GUIDE.

IV. MAINTENANCE AND ADJUSTMENTS

F. SEVERE CONDITIONS

1. The service intervals specified are based on normal operating conditions. Operation under unusual conditions require some adjustments in servicing intervals.

2. When the average temperature is above 80°F (26°C) or below -10°F (-23°C), reduce service intervals to one- half of those specified in Sections C through E.

3. When operating in the presence of dust or sand, reduce service time intervals by one-half of those specified.

4. When operating in excess of twelve hours per day, reduce service time intervals by one-half of those specified.

5. When operating in air with high salt or moisture, the servicing intervals need not usually be changed. However, the unit should be inspected weekly to determine if additional servicing be required. Also, have hydraulic oil tested quarterly.

6. During stand-by or inactive period, the servicing intervals may be twice those specified above. The unit should be exercised every week. Also, refer to the Caterpillar OPERATION GUIDE.

IV. MAINTENANCE AND ADJUSTMENTS

G. LUBRICATION

1. Crankcase (Diesel Engine)

a. Follow the engine manufacturer's maintenance schedule and the lubricating oil specifications outlined in the CATERPILLAR OPERATION GUIDE.
b. The lubricant shall meet the performance requirements of API Service Classifications CD or MIL-L-2104C.
c. New engines are shipped with ASHLAND 400M+HDT 15W-40 and the following multi-grade crankcase oils are recommended for use or replacement in normal operation (10°F to 90°F) (-12°C to 32°C).

| | | |
|---|---|---|
| AMOCO | 15W-40 | 300 |
| ARCO | 15W-40 | Fleet S3 Plus |
| BORON (BP) | 15W-40 | Vanellus C Extra |
| CHEVRON | 15W-40 | Delo 400 |
| CITGO | 15W-40 | C500 Plus |
| CONOCO | 15W-40 | Fleet Supreme |
| EXXON | 15W-40 | XD3 |
| GULF | 15W-40 | Super Duty Plus |
| MOBIL | 15W-40 | Delvac Super |
| PHILLIPS | 15W-40 | Super HD II |
| SHELL | 15W-40 | Rotella T |
| SUN | 15W-40 | Sunfleet Super C |
| TEXACO | 15W-40 | Ursa Super Plus |
| UNION | 15W-40 | Guardol |
| VALVOLINE | 15W-40 | All Fleet |

d. For operation in cold weather climate, refer to the CATERPILLAR OPERATION GUIDE Crankcase Lubricating Oils or contact the nearest Caterpillar representative. For Cold Weather Recommendations (CAT bulletin #SEBU5898-06)

2. Vibration Case

The oil level is easily read through the sight glass located at the lower center of the vibration case opposite the motor side. The proper level is to the middle of the sight gage. DO NOT OVER FILL. Lubricating oil may be added when necessary through either of the holes in the vibration case top plate after removing the 1" pipe plugs. To drain the case, remove a 3/4" pipe plug at either end of the base plate. Tilt the case for complete drainage.

IV. MAINTENANCE AND ADJUSTMENTS

G. LUBRICATION (CONTINUED)

3. Multi-Pump Drive Adapter

The oil level is easily checked by looking at the sight gage in the center near the bottom of the multi-pump drive adapter. Lubricating oil should be half way up the sight gage. If low, lubricating oil may be added by removing the breather located on the right side of the Multi-pump Drive Adapter. Draining the lubricating oil may be done by removing the 1/2 socket head pipe plug on the bottom of the Multi-pump Drive Adapter.

4. The preferred lubricating oil for J&M vibration cases and multi-pump drive adapters is a "High Moly Oil" (Schaeffer 268). Longer intervals between oil changes and fewer maintenance hours spent on mechanical service can generally be realized with this oil.

Therefore, whenever the "first preferred" oil is not available or desired, and an alternate oil is selected, it will be necessary to test and/or change the oil at shorter intervals.

Extensive tests have indicated that the use of Schaeffer 268 results in cooler operation and extended bearing and gear life.

The vibration case and multi-pump drive adapter lubricant installed at the factory is SCHAEFFER 268 but the following gear lubes may be used when changing lubricants:

FIRST Preference Group :
SCHAEFFER 268

SECOND Preference Group:

| | |
|---|---|
| MOBIL | SHC-634 |
| BORON | Gearep 140 |
| CHEVRON | Gear Comp. NL460 |
| CITGO | Premium MP 85W-140 |
| CITGO | Standard MP 85W-140 |
| GULF | Lub 85W-140 Lub 85W-140 |
| PHILLIPS | SMP 85W-140 |
| SHELL | Omala 460 Omala 460 |
| SUN | Sunep 1110 |

IV. MAINTENANCE AND ADJUSTMENTS

G. LUBRICATION (CONTINUED)

THIRD Preference Group (Natural Petroleum Base):

| | |
|---|---|
| AMOCO | Perma Gear EP140 |
| ARCO | Pennant NL 460 |
| CONOCO | EP 460 |
| EXXON | Spartan EP 460 |
| PHILLIPS | AP 140 |
| TEXACO | Meropa 460 |
| UNIONMP | 85W-140 |
| VALVOLINE | Gear Lub 85W-140 |

SCHAEFFER 268 Lubricant is available from J&M in five gallon cans. See SECTION VIII - ORDERING PARTS, page VIII-48

5. Hydraulic System

To maintain the maximum operating efficiency in the precision parts of the hydraulic system, it is extremely important to eliminate factors which can cause breakdowns or unsatisfactory performance in the system. Among the most common of these factors are rust, corrosion, contamination and the products of oil deterioration. Most problems can be minimized or avoided simply by maintaining a disciplined preventive maintenance program.

Some simple steps to follow as part of that program are:

a. Keep stored oil dry and clean at all times and always store in clean containers.

b. Always clean tools, spouts, lids, funnels, etc. when used in conjunction with the transfer of oil.

c. Never put dirty oil into the hydraulic system. Use only clean, uncontaminated oil of the types recommended below. Never return to the system any oil which has leaked out.

NOTE: Foreign material in the hydraulic system can drastically effect the life and operation of many hydraulic component parts.

d. Clean or replace filter elements at the first indication that they are dirty or ineffective.

Mixing of different manufacturers' hydraulic oil is not recommended. However, it can be done if the oils are miscible (contain the same base stock and additives). It may be necessary to contact an oil supplier to determine this.

IV. MAINTENANCE AND ADJUSTMENTS

G. LUBRICATION (CONTINUED)

New power units are shipped with CHEVRON Clarity AW46 hydraulic oil. This oil exceeds the requirements of both the E.P.A. and U.S. Fish and Wildlife Service for non-toxicity and is inherently biodegradable. Adding any other oil from the list that follows, will contaminate the Clarity oil and the system will no longer be environmentally friendly.

Should the customer choose to use an alternate oil, the following recommendations may be used when replacing oil in the hydraulic system. (See page IV-6)

FIRST Preference Group:

| | |
|---|---|
| CHEVRON | Clarity AW46 |
| MOBIL | DTE-15 |
| SUN | 2105 |

SECOND Preference Group:

| | |
|---|---|
| ARCO | Duro AW46 |
| CHEVRON | Hydraulic AW46 |
| PHILLIPS | Magnus A46 |
| SHELL | Tellus 46 |

THIRD Preference Group:

| | |
|---|---|
| BORON | Energol HLP46 |
| CITGO | All-Temp HD |
| CONOCO | Super 46 |
| EXXON | Nuto H46 |
| GULF | Harmony 46AW |
| SUN | Sunvis 805 MG |
| TEXACO | Rando HD AZ46 |
| UNION | Unax AW46 |

Whenever oils from the second preference group are used, it is necessary to test the oil more often to insure that viscosity remains within recommended limits while in service. Using oils from the third preference group requires even a more discerning inspection than use of oils from the second group. Third Group oils may be used when temperature variations are less than those listed below.

The recommended oils were chosen based on the hydraulic system operating temperature range being 5°F (-15°C) (cold ambient start-up) to 160°F (71°C) (maximum operating).

IV. MAINTENANCE AND ADJUSTMENTS

G. LUBRICATION (CONTINUED)

When operating in arctic conditions, it is recommended to use an immersion heater to pre-heat the oil prior to starting. Contact J&M for other arctic operating procedures. It may also be necessary in extremely cold or hot climates to use a different viscosity oil which is better adapted to adverse conditions. Contact the nearest oil supply representative for suggested procedures.

CHEVRON Clarity AW46 hydraulic oil is available from J&M in five gallon cans. See SECTION VIII - ORDERING PARTS.

H. DRAINING AND FILLING HYDRAULIC OIL RESERVOIR

1. The Hydraulic reservoir is drained by removing a plug on the bottom of the reservoir.

2. The hydraulic reservoir is filled by the manual pump mounted on the back (engine side) of the reservoir. All oil is pumped to the reservoir through the return filter (F2) to insure no dirt enters the hydraulic system.

IV. MAINTENANCE AND ADJUSTMENTS

I. CHANGING HYDRAULIC RETURN FILTER ELEMENT

1. The 2 return filters are located in the hydraulic reservoir above the manual hand pump.
2. To remove filter elements, remove the 4 hex head screws and remove the cover assembly. Screw driver slots are provided at bottom to aid in removing the cover. (Note: Approximately 1 gallon (3.8L) of oil will be lost per filter.)
3. Remove the bypass valve and spring assembly from filter housing. Remove the element.
4. Clean filter housing interior and all component parts with a lint-free rag.
5. Check O-ring for damage. Lubricate with multi-purpose grease.
6. Install new filter element (P/N 140403).
7. Replace bypass valve and spring assembly.
8. Replace cover and tighten 4 hex head screws.
9. Repeat for second filter.
10. Start power unit and run for approximately five minutes. Stop power unit and check for leaks.

IV. MAINTENANCE AND ADJUSTMENTS

K. BOLT TORQUE INFORMATION

The only way to actually tighten high strength bolts is with a torque wrench. Proper use of the torque wrench is important. To obtain the listed torques, a steady pull should be exerted to the handle until the desired torque is reached.

The following torque specifications apply to the bolts from the component assemblies listed. Whenever any of these bolts, are replaced, the given torque specifications should be adhered to.

| VIBRATION SUPPRESSOR | | Page VIII-6 |
|---|---|---|
| Item 8 | 3/8"-16 | 48 Ft-Lbs (6.6 Kg-M) |
| Item 17, 29, 36 | 1/2"-13 | 119 Ft-Lbs (16.4 Kg-M) |
| Item 14 | 5/8"-11 | 233 Ft-Lbs (32.2 Kg-M) |
| Item 12, 43, 44 | 3/4"-10 | 417 Ft-Lbs (57.6 Kg-M) |
| Item 38, 40 | 1"-8 | 1009 Ft-Lbs (139.4 Kg-M) |
| VIBRATION CASE | | Page VIII-10 |
| Item 16 | 1/2"-13 | 119 Ft-Lbs (16.4 Kg-M) |
| Item 17 | 3/4"-10 | 417 Ft-Lbs (57.6 Kg-M) |
| CLAMP BODY | | Page VIII-40 |
| Item 3, 7 | 1"-8 | 1009 Ft-Lbs (139.4 Kg-M) |
| Item 18 | 1-1/2"-6 | 2800 Ft-Lbs (387 Kg-M) |

V. HYDRAULIC CIRCUITRY (REFERENCE: HYDRAULIC SCHEMATIC PG V-4)

A. HYDRAULIC CLAMP

With the diesel engine running, hydraulic oil is taken from the reservoir by the clamp pump (P2). The clamp pump flow returns to the reservoir if the clamp switch on the pendant has not been moved.

Turning the clamp switch on the control pendant to CLOSE activates the CLAMP CONTROL VALVE (V1). Hydraulic oil is directed to the CLOSE CLAMP side of the hydraulic CYLINDER (CYL) in the hydraulic clamp. The clamp closes. Clamping pressure is indicated by the Clamp Pressure Gage (GA-3). When clamping pressure reaches approximately 5500 PSI (379 Bar), the CLAMP PRESSURE SWITCH (PS-1) deactivates the CLAMP CONTROL VALVE (V1), which directs the flow from the clamp pump to the reservoir. Pressure at the clamp is maintained by the CLAMP CHECK VALVE (CV5). If clamping pressure falls below 5000 PSI (345 Bar), the CLAMP PRESSURE SWITCH activates the CLAMP CONTROL VALVE to restore pressure. In the event of hose failure, a second clamp check valve (CV7), located in the clamp cylinder, will hold the clamp cylinder closed.

Turning the clamp switch on the control pendant to OPEN activates the CLAMP CONTROL VALVE (V1). Hydraulic oil is directed to the OPEN CLAMP side of the hydraulic cylinder. The pressure in the OPEN CLAMP line opens the CLAMP CHECK VALVES (CV5 & CV7). The clamp opens. Pressure in the OPEN CLAMP line is indicated by the clamp pressure gage (GA-4).

Pressure in the clamping circuit is limited to 5500 PSI (379 Bar) by the CLAMP RELIEF VALVE (RV2). The quick-disconnect couplers (QD3 & QD4) permit de-coupling of the clamp hoses at the power unit.

B. VIBRATOR DRIVE

With the diesel engine running, hydraulic oil is taken from the reservoir by the four DRIVE PUMPS (P1). Oil pressure opens the cartridge C2 and vents the hydraulic oil back to the reservoir through the RETURN FILTERS (F2), if the vibrator button (START) has not been pushed.

Pushing the START button, on the control pendant, activates the SOLENOID on the CONTROL VALVE (V2). By blocking the pilot flow from cartridge C2, the CONTROL VALVE (V2) causes this cartridge to close, thus directing pump flow to the VIBRATOR MOTORS (M).

V. HYDRAULIC CIRCUITRY

B. VIBRATOR DRIVE (CONTINUED)

Full motor speed is reached within a few seconds and the motor drive pressure is indicated by GAGE (GA1). Maximum drive pressure is limited to approximately 6000 PSI (414 Bar) by the FORWARD RELIEF VALVE (RV1). The RELIEF VALVE (RV1), if opened by over pressure, permits a small pilot flow from cartridge (C2). This pilot flow causes cartridge (C2) to partially open and allows some or all of the pump flow to return to the reservoir. Oil exiting VIBRATOR MOTORS (M) opens cartridge BV and returns to the power unit. Cartridge BV opens easily because its pilot flow is "vented" by BRAKE VALVE (RV5). BRAKE VALVE (RV5) is held open by pressure coming from the motor drive FORWARD system. Case drain oil from the motors returns to the reservoir. Case drain pressure is limited to 50 PSI (3.4 Bar) by the CASE DRAIN RELIEF VALVE (RV3). Oil returning to the power unit returns to the reservoir through COOLER VALVES (V3), HEAT EXCHANGER (HE) and RETURN FILTERS (F2).

Pushing the STOP button on the control pendant, de-energizes the CONTROL VALVE (V2) and "vents" (open) cartridge C2, allowing pump flow to go directly back to the reservoir. When pressure is removed from the drive FORWARD system, the BRAKE VALVE RELIEF (RV5) closes and blocks the pilot flow to BRAKE VALVE (BV) cartridge, causing it to close. Maximum brake pressure generated by BRAKE VALVE (BV) is limited by BRAKE VALVE RELIEF (RV5) TO 2000 PSI (138 Bar). This 2000 PSI (138 Bar) back pressure rapidly brakes the motors (M) to a stop.

Hydraulic oil temperature is regulated by the COOLER VALVES (V3). When oil temperature is below 100°F (38°C), V3 directs the flow directly to the reservoir through FILTER (F2). When oil temperature exceeds 100°F (38°C), COOLER VALVE (V3) directs flow through the HEAT EXCHANGER (HE) before it enters the reservoir, through FILTER (F2). Excessive pressure in the HEAT EXCHANGER (HE) is prevented by CHECK VALVES (CV3 & CV4), which bypasses excess flow and limits pressure to 65 PSI (4.5 Bar).

The quick-disconnect couplers (QD1, QD2, and QD5) permit de-coupling of the drive and case drain hoses at the power unit.

V. HYDRAULIC CIRCUITRY

C. OTHER

Returning oil is filtered by the RETURN FILTER (F2). The return FILTER CHECK VALVES (CV1 and CV2) prevents oil loss from the reservoir when the filter elements are removed.

A manual PUMP (MP) is provided to fill the hydraulic reservoir. A CHECK VALVE (CV8) prevents loss of returning hydraulic oil back through this pump.

Temperature of the oil in the reservoir is continually sampled by the hydraulic oil Temperature Switch Gage (TS2), which shuts down the diesel engine if the oil temperature exceeds 160°F (71°C).

Motor cavitation is prevented in the braking operation by the CHECK VALVE (CV6).

Extra Long ACCUMULATOR HOSE (AC) in the pilot system expands as pressure increases. The additional pilot flow causes cartridge (C2) to produce a smooth acceleration of the VIBRATOR MOTORS (M).

V. HYDRAULIC CIRCUITRY

HYDRAULIC SCHEMATIC

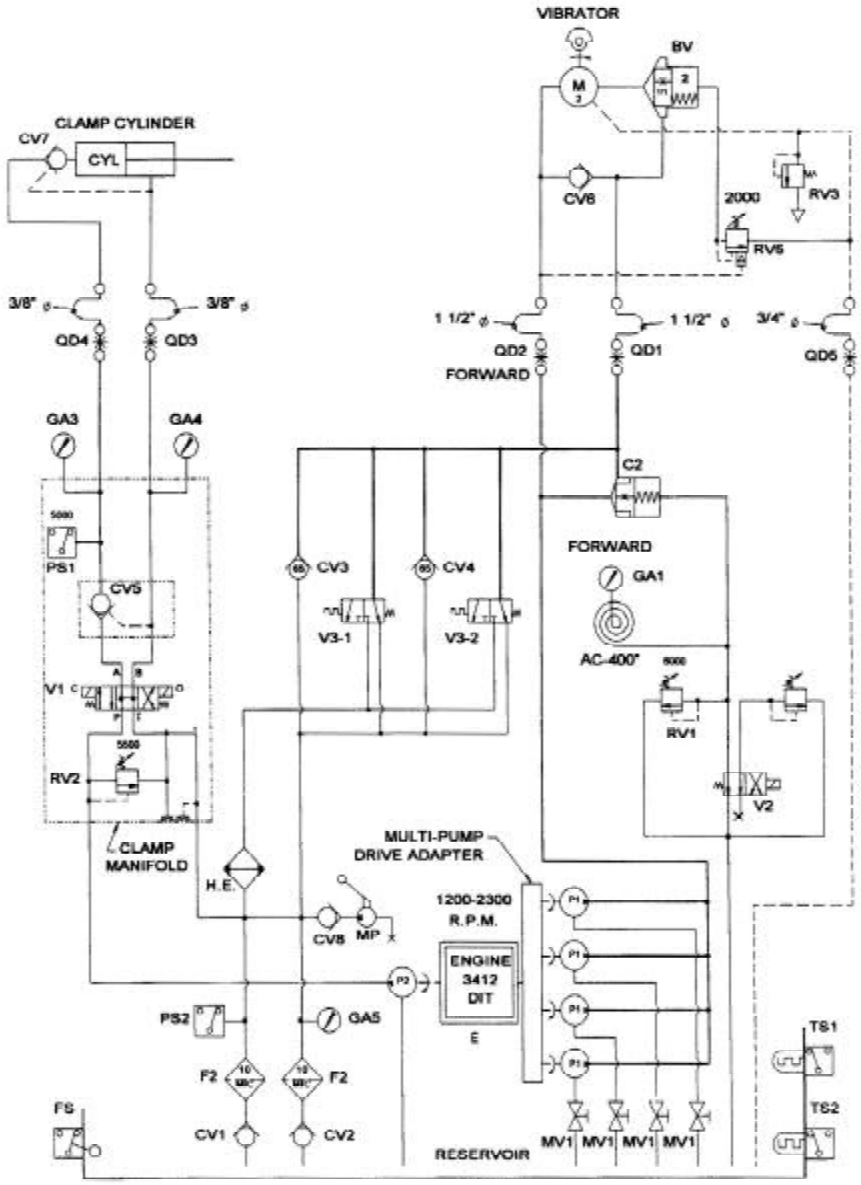

V. HYDRAULIC CIRCUITRY

D. HYDRAULIC COMPONENTS LIST

| Notation | Description | Part Number | Page Number |
|---|---|---|---|
| AC | Accumulator Hose | 110680 | VIII-33 |
| BV | Brake Valve Cartridge | 110622 | VIII-13 |
| C2 | Cartridge Valve | 140669 | VIII-37 |
| CV3 & 4 | Check Valve -Bypass | 130339 | VIII-37 |
| CV5 | Clamp Check Valve | 110149 | VIII-39 |
| CV6 | Check Valve - Vibrator | 110296 | VIII-13 |
| CV7 | Check Valve - Clamp Cylinder | 120629 | VIII-41 |
| CV8 | Manual Pump Check Valve | 100451 | VIII-29 |
| CYL | Hydraulic Clamp Cylinder | | |
| E | Diesel Engine | 140871 | VIII-28 |
| F2 | Return Filter (2) | 140179 | VIII-29 |
| | CV1 & 2 Return Filter Check Valve | | |
| FS | Float Switch | 100314 | VIII-30 |
| GA1-3 | Pressure Gage | 110600 | VIII-31 |
| GA5 | Filter Indicator Gage | 100775 | VIII-29 |
| HE | Heat Exchange | 140237 | VIII-33 |
| M | Motor (2) | 110328 | VIII-11 |
| MP | Manual Pump | 100447 | VIII-29 |
| P1 | Drive Pump (4) | 100406 | VIII-28 |
| P2 | Clamp Pump | 140839 | VIII-31 |
| PS1 | Clamp Pressure Switch | 810425 | VIII-39 |
| PS2 | Return Filter Pressure Switch | 140413 | VIII-29 |
| QD1 | Vibrator Reverse Disconnect | 110690 | VIII-30 |
| QD2 | Vibrator Forward Disconnect | 110692 | VIII-30 |
| QD3 | Clamp Open Disconnect | 100777 | VIII-30 |
| QD4 | Clamp Close Disconnect | 100245 | VIII-30 |
| QD5 | Case Drain Disconnect | 400095 | VIII-30 |
| RV1 | Forward Relief Valve | 100898 | VIII-32 |
| RV2 | Clamp Relief Valve | 100898 | VIII-39 |
| RV3 | Case Drain Relief Valve | 100032 | VIII-13 |
| RV5 | Brake Valve Relief | 110310 | VIII-13 |
| TS1 | Temperature Switch | 110590 | VIII-31 |
| TS2 | Temperature Switch | 110640 | VIII-21 |
| V1 | Clamp Control Valve | 110147 | VIII-39 |
| V2 | Control Valve | 140665 | VIII-32 |
| V3 | Cooler Valve (2) | 110628 | VIII-37 |

VI. ELECTRIC CIRCUITRY (Reference:Electrical Schematic Pg VI-5)

A. STARTING DIESEL ENGINE

The engine batteries (EB1, EB2) provide 24-volt current to start the diesel engine. With the MAIN POWER (CB2) switch on, turning the ENGINE START switch to START energizes the start motor solenoid (SOL) and turns over the diesel engine. If fuel is available, the diesel engine will start.

B. STOPPING DIESEL ENGINE

Turning the ENGINE START switch to OFF de-energizes the fuel pump RACK SOLENOID, by de-energizing fuel relay (R3), which shuts off the fuel supply to the diesel engine. The engine stops.

C. SAFETY CONTROL SYSTEM

A system of safety controls shut off the fuel supply, thereby stopping the diesel engine in the event that any one of six malfunctions occur. The heart of the safety system is the SHUTDOWN RESET which is closed during normal operations (button in), thereby providing current to the fuel relay (R3). With the fuel relay energized, a set of contacts (R3A) close, energizing the RACK SOLENOID and turning on the fuel supply. With the SHUTDOWN RESET closed (button in) power is provided to the vibrator start circuitry.

As mentioned above, the SHUTDOWN RESET is closed during normal operation. If the SHUTDOWN RESET is opened, the fuel relay (R3) is de-energized, contacts RA3 open, resulting in the RACK SOLENOID being de-energized thereby shutting off the fuel supply and stopping the diesel engine. The SHUTDOWN RESET opens when its timing delay coil (TD,C), or it's "instant trip" coil (C), is energized. The timing delay or instant trip coil may be energized by any of the following devices.

1. Engine Oil Pressure Gage - if pressure is below 10 PSI (.7 Bar), the contacts of the gage will be closed providing current to energize the instant trip coil (C) and to turn on the indicator light (L1). On start-up, the button on the SHUTDOWN RESET (on the control panel) must be held in until the oil pressure exceeds 30 PSI (2 Bar).

2. ENGINE WATER TEMPERATURE GAGE - If water temperature exceeds 210°F (99°C), the contacts of the gage will close energizing the timing delay coil (TD,C) and turning on the indicator light (L2).

3. Engine Overspeed Switch - if the engine overspeeds, the overspeed switch will close, energizing the instant trip coil (C) and turning on indicator light (L3).

VI. ELECTRICAL CIRCUITRY

C. SAFETY CONTROL SYSTEM (CONTINUED)

4. Return Filter Switch - if the hydraulic return filter is clogged, the return filter switch (PS3) will close energizing the timing delay coil (TD,C) and turning on the indicator light (L4). The Return Filter Shutdown is disabled if Temperature Switch Contacts (TS1) are opened by oil temperature less than 100°F (38°C).

5. Hydraulic Oil Level Switch - if the hydraulic oil level is low, the hydraulic oil switch will close energizing the timing delay coil (TD,C) and turning on indicator light (L5).

6. Hydraulic Oil Temperature Gage - if the temperature of the hydraulic oil exceeds 160°F (71°C), the hydraulic oil temperature gage switch will close, energizing the timing delay coil (TD,C) and turning on indicator (L6).

A diode (D1-D6) on each malfunction switch limits the flow of direct current to prevent multiple lights coming on. Another diode (D8) prevents arcing in the malfunction switches.

Emergency Stop - When the diesel engine is running, pressing the EMERGENCY STOP button on the pendant, energize the coil on the SHUTDOWN RESET. The Shutdown Reset opens and the engine and vibrator are stopped.

D. CLOSING HYDRAULIC CLAMP

With the diesel engine running, turning the clamp switch (OPEN-CLOSE) on the control pendant to CLOSE energizes the close-clamp solenoid (CLOSE-SOL.). This operates the clamp control hydraulic valve and closes the clamp.

When the pressure in the close-clamp hydraulic circuit reaches 5500 PSI (379 Bar), the pressure switch (PS1) opens and de-energizes the CLOSE-CLAMP solenoid and turns on the CLAMP LIGHTS on the control pendant and control panel. If close-clamp pressure falls below 5000 PSI (345 Bar), the pressure switch closes and re-energizes the close-clamp solenoid to rebuild pressure. The CLAMP LIGHTS go out. When pressure returns to 5500 PSI (379 Bar), the pressure switch opens de-energizing the close-clamp solenoid and turns on the CLAMP LIGHTS.

E. OPENING HYDRAULIC CLAMP

With the diesel engine running, turning the clamp switch (OPEN-CLOSE) to OPEN energizes the open-clamp solenoid (OPEN SOL.). The clamp opens. Normally Closed Contacts (R1C) in the Start Relay (R1), prevent the operator from opening the clamp while the vibrator is running.

VI. ELECTRICAL CIRCUITRY

F. STARTING THE VIBRATOR

With the diesel engine running, pressing the START button on the control pendant energizes the start relay coil (R1). Start relay contacts (R1-A) close and keep the relay coil energized until the STOP button is depressed. A second set of start relay contacts (R1-B) close and energizes the FORWARD SOLENOID on the Control Valve. The Control Valve sends hydraulic oil to the vibrator motors. The motors start. A third set of contacts (R1-C) opens to prevent the OPEN SOLENOID being energized to open the hydraulic clamp while the vibrator is running.

G. STOPPING THE VIBRATOR

With the diesel engine running, pressing the STOP button on the control pendant de-energizes the start relay coil (R1). The start relay contacts (R1-B) open and de-energize the FORWARD SOLENOID. The Control Valve stops the flow of hydraulic oil to the vibrator motors. The motors stop. The start relay contacts (R1-C) close to allow the OPEN SOLENOID to be energized when the OPEN clamp button is turned to the OPEN position.

H. OTHER

The ammeter (AM) indicates charging amperes. The tachometer generator (TACH GEN) powers the tachometer (TACH) to indicate engine speed. The Hour meter(M1) indicates the engine operating hours.

Duplicate vibrator and clamp switches are located on the control pendant and on the control panel. Turning the LOCAL-REMOTE switch to LOCAL activates only the clamp and vibrator switches located on the control panel. Turning the LOCAL-REMOTE switch to REMOTE only permits operation of the clamp and vibrator from the control pendant. The EMERGENCY STOP button on the pendant is functional at all times.

Turning the Throttle switch to the FAST position will retract the electric throttle actuator (M) and increase engine speed (RPM). Turning the Throttle switch to the SLOW position will extend the electric throttle actuator (M) and decrease engine speed.

## VI. ELECTRICAL CIRCUITRY

### ELECTRICAL LAYOUT

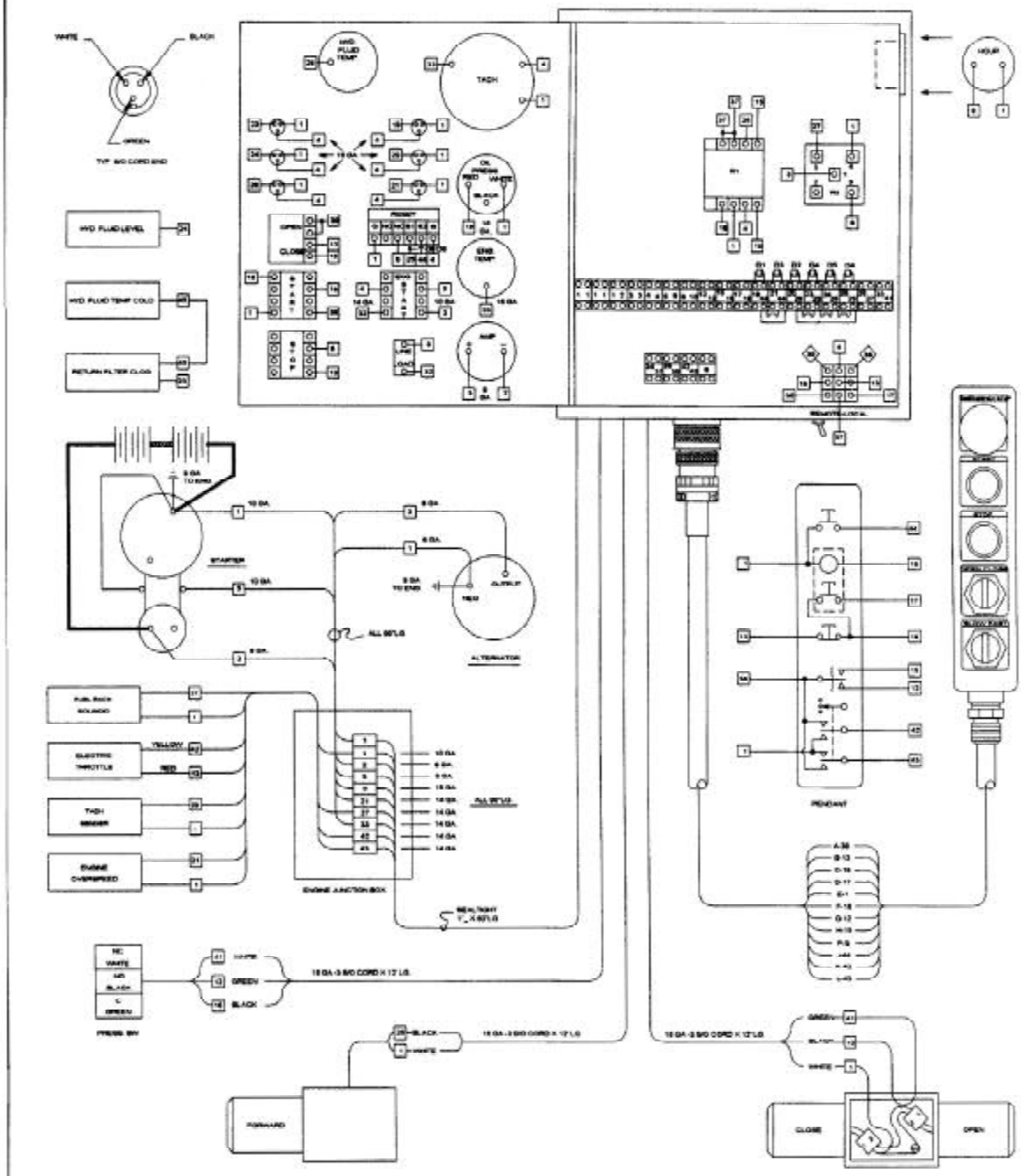

## VI. ELECTRICAL CIRCUITRY

### ELECTRICAL SCHEMATIC

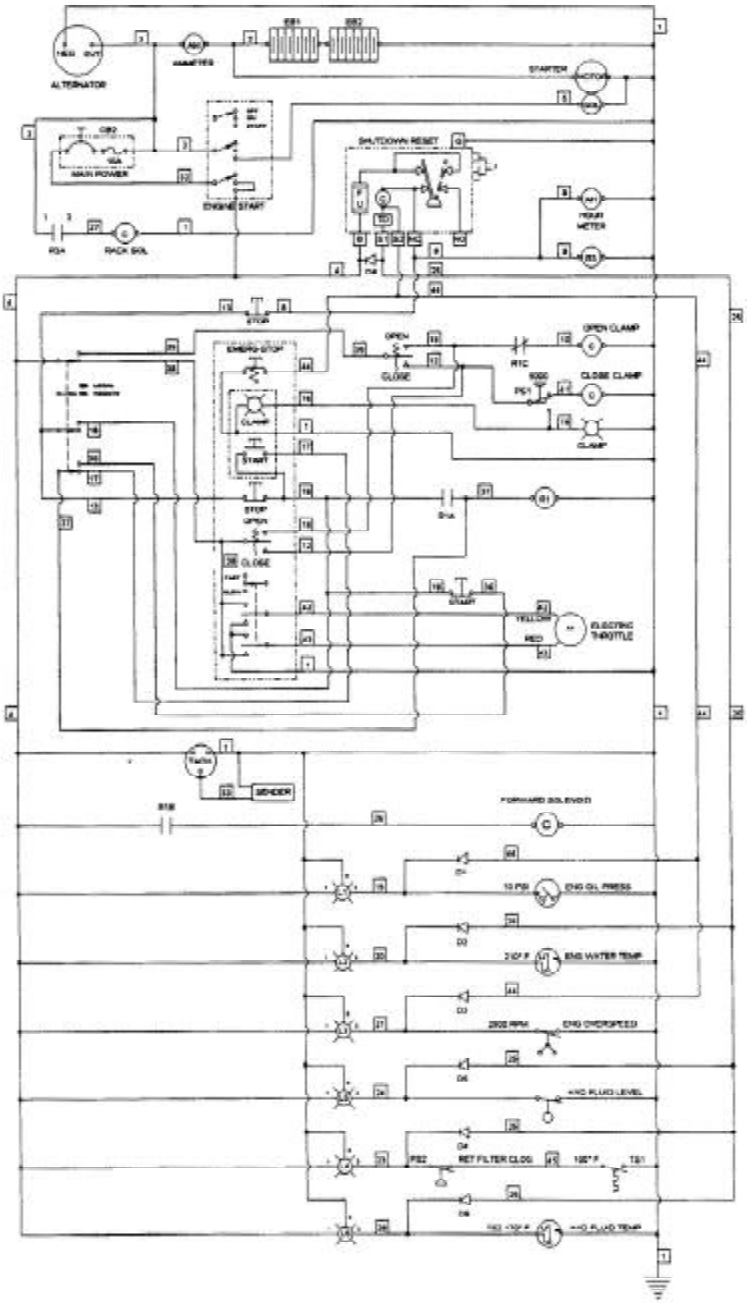

VI. ELECTRICAL CIRCUITRY

I. ELECTRICAL COMPONENTS LIST

| Notation | Reference | Part Number | Page Ref. |
|---|---|---|---|
| ALTERNATOR | Alternator | See Cat. Parts Book | |
| AMMETER | Ammeter | 110371 | VIII-21 |
| CB2 | Main Power Switch | 400141 | VIII-21 |
| CLAMP LIGHT (2) | Clamp Light | 110598 | VIII-21 & 25 |
| CLOSE SOL | Close-Clamp Solenoid | 110147 | VIII-39 |
| D1-D6, D8 | Diode | 100413 | VIII-21 |
| EB1 , EB2 | Engine Battery | 100529 | VIII-31 |
| ENG. OIL PRESS. | Engine Oil Pressure Gage And Switch | 100329 | VIII-21 |
| ENG. START | Engine Start Switch | 110615 | VIII-21 |
| EMERG-STOP | Emergency Stop Switch | 130507 | VIII-25 |
| ENG. WATER TEMP. | Engine Water Temperature Gage And Switch | 110697 | VIII-21 |
| ENG. OVERSPEED | Engine Overspeed Shut-Down Switch | 110972 | VIII-33 |
| FS | Hyd Oil Level Switch | 100314 | VIII-30 |
| FOR.SOLENOID | Forward Solenoid | 140665 | VIII-32 |
| HOURMETER (M1) | Hour Meter | 100343 | VIII-21 |
| L1-L6 | Shutdown Indicator Light | 100355 | VIII-21 |
| M | Electric Throttle | 110246 | VIII-33 |
| OPEN/CLOSE (2) | Clamp Switch (OPEN/CLOSE) | 130155 | VIII-21 & 25 |
| OPEN SOL | Open-Close Solenoid | 110147 | VIII-39 |
| PS1 | Pressure Switch | 810425 | VIII-39 |
| PS2 | Return Filter Clogged Switch | 140413 | VIII-29 |
| R1 | Start Relay Coil | 110584 | VIII-21 |
| R1-A,B,C | Start Relay Contacts | 110584 | VIII-21 |
| R3 | Fuel Relay Coil | 110604 | VIII-21 |
| R3A | Fuel Relay Contacts | 110604 | VIII-21 |
| RACK SOL | Fuel Rack Solenoid | See Cat. Parts Book | |
| REMOTE-LOCAL | Remote-Local Switch | 140361 | VIII-21 |
| SHUTDOWN RESET | Engine Safety Shutdown | 110456 | VIII-21 |
| SLOW-FAST | Engine Throttle Switch | 100566 | VIII-25 |
| START | Start Vibrator Button | 110598 | VIII-21 & 25 |
| STARTER | Engine Starter Motor | See Cat. Parts Book | |
| STOP | Stop Vibrator Button | 100363 | VIII-21 & 25 |
| TACH | Tachometer | 110650 | VIII-21 |
| SENDER | Engine Tach Pick-Up | 100408 | VIII-31 |
| TS1 | Hyd Oil Temp. Switch | 110590 | VIII-31 |
| TS2 | Hyd Oil Temperature Switch Gage | 110640 | VIII-21 |

# VII. GENERAL DATA

## A. ABBREVIATIONS

The abbreviations shown below are used throughout the parts lists and various other parts of the manual.

| | |
|---|---|
| ASM. | Assembly |
| BHCS | Button Head Cap Screw |
| Cyl. | Cylinder |
| DC | Direct Current |
| FHCS | Flat Head Cap Screw |
| FLCS | Flanged Head Cap Screw |
| HC | High Collar |
| HHCS | Hex Head Cap Screw |
| HHPP | Hex Head Pipe Plug |
| HSSS | Hex Socket Set Screw |
| Hyd. | Hydraulic |
| Lg | Long |
| mm | Millimeter |
| Mtg. | Mounting |
| NPT. | National Pipe Thread |
| PHMS | Phillips Head Machine Screw |
| P/N | Part Number |
| Qty. | Quantity |
| RHMS | Round Head Machine Screw |
| Sch. | Schedule |
| SHCS | Socket Head Cap Screw |
| SHPP | Socket Head Pipe Plug |
| SHSS | Socket Head Shoulder Screw |
| S/N | Serial Number |
| Sol. | Solenoid |
| UNF | Unified National Fine |
| UNC | Unified National Coarse |

## B. SCREWS AND BOLTS

1. Practically all connections on the unit are made with socket head (Allen) cap screws. These high-strength screws are available at most industrial supply houses.

2. Screws and bolts are designated in the PARTS LIST in abbreviated form. (Refer to sub-section A, above, for specific abbreviations). Listed below is a typical screw description: .50 - 13 UNC x 1.50 Lg SHCS

   .50 = Diameter
   13 UNC = Threads Per Inch
   1.50 Lg = Length
   SHCS = Screw Type Abbreviation

VII. GENERAL DATA

B. SCREWS AND BOLTS (CONTINUED)

3. Some screws or bolts require a specific torque when replacing. For identification of these bolts and a more thorough understanding of torque, refer to page IV-10.

C. SERIAL NUMBER LOCATIONS

1. The following J&M vibratory units are serial numbered separately:

   a. Vibrator
   b. Power unit
   c. Piling clamps
   d. Caisson beams
   e. 90 deg. clamp adapter

2. In addition to the serial number plate itself (on vibrators, power units and clamps), the serial number is stamped into each unit in one or more places as follows:

   a. Vibrator stamped twice - once on top right side of suppressor housing, once on bottom lip of vibration case on right side of motors' side.

   b. Power unit stamped twice - once on control panel side of unit at right corner of reservoir, once on sub-base inside door below hex-key rack.

   c. Model 196 universal clamp is stamped three times - once between the cylinder and pile guide, once above the grease fitting, and once on the flange of the cylinder housing.

   d. Model 122 caisson clamp stamped twice - once on side of the body at the jaw opening nearest the fixed jaw side, and once on the underside of the body under the pile guide on the cylinder side.

   e. Caisson beam is stamped three times - once on top center, once in center of both sides of flange.

   f. 90 deg. clamp plate stamped twice - once on top center, once on side.

VIII. ORDERING PARTS

A. PROCEDURE

1. When ordering parts, be sure to include the model and serial number of the unit or component. The serial number may be located by referring to SECTION VII, SERIAL NUMBER LOCATION. Confirm all telephone orders in writing immediately to avoid duplicating shipment.

2. ORIGINAL EQUIPMENT; Where component serial numbers are given, these apply only to equipment and components originally furnished with the unit. Where equipment has been changed or upgraded these numbers may not be an adequate description.

3. SHIPMENT; Specify shipping address, phone number, billing address and method of shipment. UPS and air express shipments must have street address for delivery. All shipments will be made freight collect unless instructed otherwise.

4. SHORTAGES; Claims for shortages, damage or errors should be made immediately upon receipt of parts. No responsibility will be assumed for delay, damage or loss of material while in transit. Broken, damaged or lost material should be refused or a full description made of damage or loss to the carrier agent on the freight or express bill.

5. RETURN OF PARTS; If for any reason you desire to return parts to the factory or to any distributor from whom these parts were obtained, you must first secure permission to return the parts. Shipping instructions will be given along with this permission. A fifteen percent handling charge must be assessed against the returned shipment unless an error is made by the factory or by the distributor when filling your order.

## VIII. ORDERING PARTS

### B. FITTING DESCRIPTION KEY

FITT 2 L - 16 M 12 J 00 0 - 00L 0 0 0 1

**SELECTOR INDEX**
2 - INCH FITTING
9 - METRIC FITTING

**CONFIGURATION OR SHAPE OF FITTING**
S - STRAIGHT FITTING
L - 90 Deg. ELBOW
V - 45 Deg. ELBOW
T - TEE
C - CAP
P - PLUG
U - UNION
X - CROSS
(FOURTH END FITT'G REQ'D.)

**FIRST END SIZE**
* IN 1/16THS OF AN INCH (INDEX 2)
IN MILLIMETERS (INDEX 9)
SEE GENERAL SPECIFICATION SHEET FOR SEQUENCE OF ORDER

**FIRST END FITTING STYLE**
SEE FITTING STYLE SELECTOR CHART SC-1

**SECOND END SIZE**
IF APPLICIABLE - SEE FIRST END SIZE

**SECOND END FITTING STYLE**
IF APPLICABLE - SEE FIRST END FITTING STYLE

**THIRD END SIZE**
IF APPLICABLE - SEE FIRST END SIZE

**THIRD END FITTING STYLE**
IF APPLICABLE - SEE FIRST END SIZE

**MATERIAL**
1 - CARBON STEEL
2 - BRASS
4 - STAINLESS STL
5 - AAR MAL. IRON
6 - MALEABLE IRON
8 - FORGED STEEL

**SPECIAL NOTATIONS**

**PRESSURE RATING**
0 - NONE
1 - 125 LB.
3 - SCH 40
4 - SCH 80

**INSTALLATION AID OR STYLE OF HEAD**
0 - NOT APPLICABLE
H - REGULAR HEX
Q - SQUARE HEAD (EXT.)
R - SQUARE HEAD (INT.)
S - HEX HEAD (INT SOCKET)
T - HEX HEAD (EXT.)

**LENGTH CODE**
(ELBOWS & NIPPLES)
__L - LONG (ELBOW)
__X - EXTRA LONG (ELBOW)
__C - CLOSE (NIPPLE)

PIPE NIPPLES (LONG) ONLY
IN DEC. INCHES FOR INDEX 2
050 = 5.0 INCHES
105 = 10.5 INCHES

IN MILLIMETERS FOR INDEX 9
120 = 12.0 MILLIMETERS
084 = 8.4 MILLIMETERS

**FOURTH END SIZE & FITTING STYLE**
(CROSSES ONLY)
SEE FIRST END FITTING SIZE OR END STYLE

* EXCEPTIONS

| | |
|---|---|
| 90 = 10" | 96 = 6" |
| 92 = 12" | 98 = 8" |
| 94 = 14" | 99 = NON CODE SIZE |

VIII. ORDERING PARTS

B. FITTING DESCRIPTION KEY (CONTINUED)

FITTING STYLE SELECTOR CHART

SC-1

FOR END FITTING STYLE SELECTION

| | | |
|---|---|---|
| M |  | JIC MALE 37 Deg. FLARE |
| P |  | MALE PIPE NPT |
| R |  | S.A.E. MALE 0-RING (& ADJUSTABLE) |
| B | 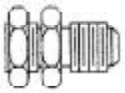 | JIC MALE 37 Deg. FLARE BULKHEAD |
| D |  | MALE PIPE NPT SWIVEL |
| S |  | B.S.P. MALE PIPE |

| | | |
|---|---|---|
| J |  | JIC FEMALE 37 Deg. FLARE (& SWIVEL) |
| Q |  | FEMALE PIPE NPTF |
| K |  | S.A.E. FEMALE O-RING |
| N |  | FEMALE PIPE NPSM-SWIVEL |
| F | 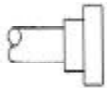 | SPLIT FLANGE 3000 PSI. CODE 61 |
| H | 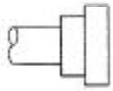 | SPLIT FLANGE 6000 PSI. CODE 62 |

VIII. ORDERING PARTS

C. HOSE DESCRIPTION CODE

The HOSE DESCRIPTION CODE is a 24 digit number enabling easier and quicker identification whenever a hose replacement is desired. The key below explains the structure of the coded number in detail.

**HOSE 125 R11 F 9 24 P 0 20 L0395 S**

HOSE I.D. IN INCHES
2 PLACE DECIMAL
(125=1-1/4") (050=1/2") etc.

SAE OR MANUFACTURER
RATING (or Special Code)
(PT4=Power Track)
(AQ1=Aeroquip H-Pac)
(TF1=Teflon)
(R01=SAE Rating 100R1) etc.
(PT6=Power Track 6000 PSI)

FIRST END-TYPE OF FITTING
(F=3000 lb Flange) (P=Male Pipe)
(H=6000 lb Flange) (M=37° Male JIC)
(J=JIC Swivel 37°)

FIRST END-BEND ANGLE
(0=None) (9=90°)
(3=30°) etc.

FIRST END-SIZE IN 1/16 ths

SECOND END-TYPE OF FITTING
(See codes for FIRST END)

SECOND END-BEND ANGLE
(See codes for FIRST END)

SECOND END-SIZE IN 1/16 ths

SPECIAL CODE
O=None
S=Spring Guard
L=S.S. Braid
D=Offset

LENGTH IN INCHES
(1 PLACE DECIMAL)
(0395=39-1/2")
(1242=124-1/4")
etc.

VIII. ORDERING PARTS

D. PARTS IDENTIFICATION

1. Parts lists and drawings are included on the following pages for the equipment components shown below:

| | | | |
|---|---|---|---|
| a. | VIBRATION SUPPRESSOR | 800487 | VIII-6 |
| b. | VIBRATION CASE | 810649 | VIII-10 |
| c. | DISTRIBUTION BLOCK | 810709 | VIII-12 |
| d. | HOSE ASSEMBLIES-INTERCONNECTING | 800433 | VIII-14 |
| e. | POWER UNIT - ENCLOSURE | 810589 | VIII-16 |
| f. | CONTROL BOX | 810679 | VIII-18 |
| g. | PENDANT ASM | 800395 | VIII-22 |
| h. | POWER UNIT - INTERNAL | 800431 | VIII-24 |
| i. | JUNCTION BOX | 810145 | VIII-33 |
| j. | CONTROL MANIFOLD | 810677 | VIII-34 |
| k. | CLAMP MANIFOLD | 810449 | VIII-36 |
| l. | MODEL 196 UNIVERSAL CLAMP | 800315 | VIII-40 |
| m. | CLAMP EXTENSION-10FT. | 800423 | VIII-42 |
| n. | 90 DEG. ADAPTER | 800049 | VIII-43 |
| o. | CAISSON BEAM-7 FT. | 800477 | VIII-44 |
| p. | CAISSON BEAM-11 FT. | 800479 | VIII-44 |
| q. | MODEL 122 CAISSON CLAMP | 800409 | VIII-46 |
| r. | PENDANT EXTENSION CABLE | 800059 | VIII-49 |

2. The spare parts list SECTION VIII - RECOMMENDED SPARE PARTS contains spare parts which may be very useful in keeping down-time to a minimum, especially in remote or secluded job sites where unforeseen communication problems could cause delay of the delivery of an awaited part.

   These RECOMMENDED SPARE PARTS may be ordered beforehand, individually or as a package group as shown in the PARTS LIST.

MODEL 44-65
VIBRATORY
DRIVER/EXTRACTOR

# PARTS LIST

VIBRATION SUPPRESSOR

800487

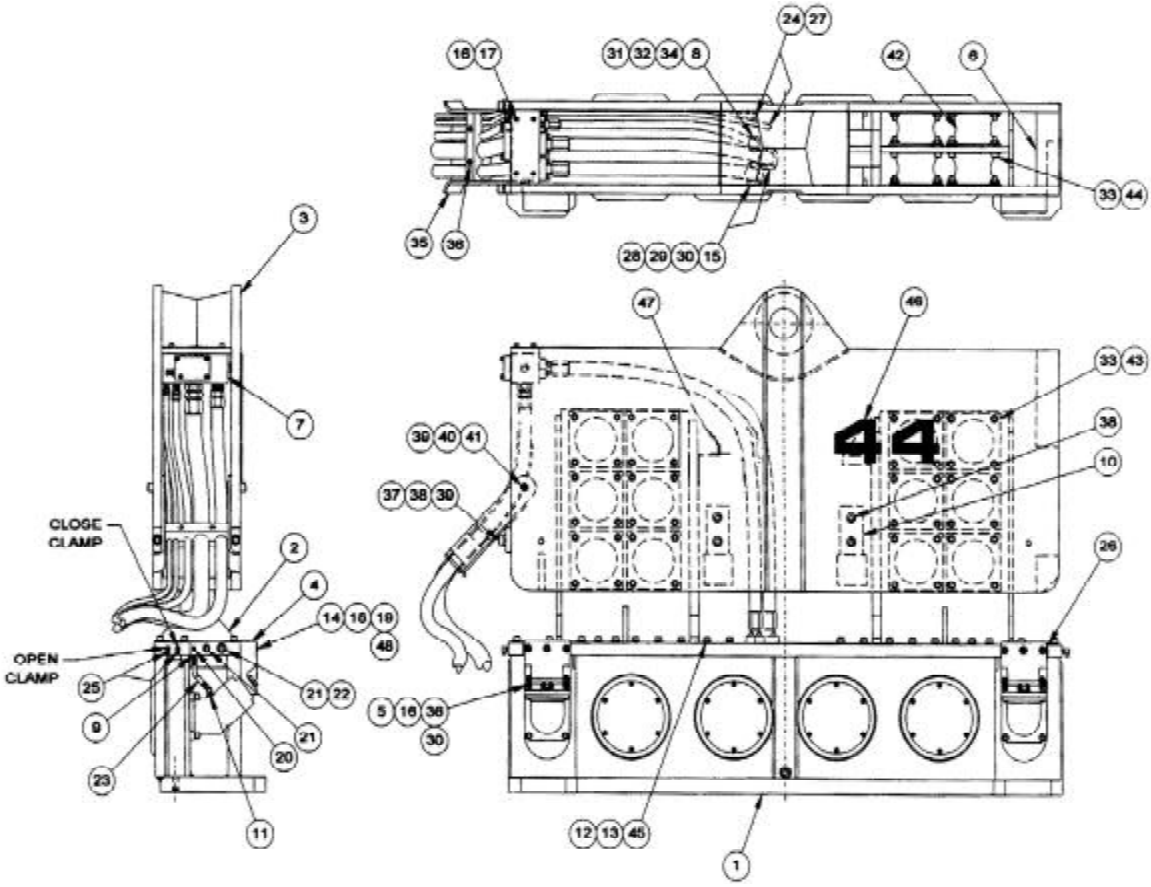

MODEL 44-65
VIBRATORY
DRIVER/EXTRACTOR

# PARTS LIST

VIBRATION SUPPRESSOR 800487

| Item | Part Number | Qty. | Description |
|---|---|---|---|
| 1 | 810649 | 1 | 44-50 Transmission Assembly |
| 2 | 110362 | 1 | 44 Transmission Adapter |
| 3 | 110360 | 1 | 44 Suppressor Housing |
| 4 | 110364 | 2 | 44-50 Motor Manifold |
| 5 | 110330 | 6 | Retainer Plate |
| 6 | 110324 | 1 | Serial Number Plate |
| 7 | 810709 | 1 | Terminal Manifold |
| 8 | 100051 | 4 | .375-16 X 1.0 Lg SHCS Locwel |
| 9 | 110630 | 2 | FITT2S-08M06P000-000H001 |
| 10 | 110358 | 2 | Stop Bars |
| 11 | 300099 | 2 | FITT2S-10R08M000-000H001 |
| 12 | 140111 | 44 | .75-10 X 4.0 Lg SHCS Locwel |
| 13 | 100069 | 44 | .75 Lock Washer Medium |
| 14 | 130135 | 6 | .625-11UNC X 3.50Lg SHCS |
| 15 | 140907 | 2 | HOSE150PT6F024F024L0835C |
| 16 | 100121 | 16 | .5 Lock Washer Medium |
| 17 | 100011 | 4 | .5-13 X 2.0 Lg SHCS |
| 18 | 110236 | 6 | .625 Flat Washer Extra Heavy |
| 19 | 100007 | 6 | .625 Lock Washer-Medium |
| 20 | 400213 | 2 | FITT2P-06P000000-000S007 |
| 21 | 100063 | 4 | FITT2P-16P000000-000S007 |
| 22 | 110055 | 2 | FITT2P-20P000000-000S007 |
| 23 | 100486 | 2 | HOSE050R01J008J008L01450 |
| 24 | 400203 | 2 | FITT2S-06M06P000-000H001 |
| 25 | 400227 | 4 | FITT2L-06M06P000-0000001 |
| 26 | 100423 | 2 | FITT2P-08P000000-000S007 |
| 27 | 140905 | 2 | HOSE038R02J006J006L0835C |
| 28 | 100596 | 4 | #24 Split Flange Half |
| 29 | 100119 | 8 | .5-13 X 1.25 Lg Shcs Locwel |
| 30 | 110119 | 6 | 2-225 O-Ring |
| 31 | 100049 | 2 | #12 Split Flange Half |
| 32 | 140903 | 1 | HOSE075PT4F012FO12L0835C |
| 33 | 100782 | 144 | .75-10 Flange Nut |
| 34 | 100097 | 1 | 2-214 O-Ring 70 DURO |
| 35 | 110356 | 1 | Hose Chute And Clamp |
| 36 | 400043 | 14 | .5-13 X 2.25 Lg SHCS |
| 37 | 110354 | 1 | Hose Chute Support |
| 38 | 100213 | 10 | 1.0-8 X 2.5 Lg SHCS LOCWEL |
| 39 | 100209 | 4 | 1.0 Lock Washer Medium |
| 40 | 140145 | 2 | 1.0-8 X 3.5 Lg SHCS |

MODEL 44-65
VIBRATORY
DRIVER/EXTRACTOR

# PARTS LIST

VIBRATION SUPPRESSOR 800487

| Item | Part Number | Qty. | Description |
|---|---|---|---|
| 41 | 400051 | 2 | 1.0-8 Hex Nut |
| 42 | 100796 | 24 | Elastomer |
| 43 | 400069 | 96 | .75-10 X 2.0 Lg SHCS |
| 44 | 100067 | 48 | .75-10 X 2.5 Lg SHCS Locwel |
| 45 | 100814 | 1 | Sealant |
| 46 | 110745 | 4 | 4 Logo Plate |
| 47 | 400277 | 2 | J&M Logo Plate |
| 48 | 100037 | 4 | 2-222 O-Ring 70 DURO |

# PARTS LIST

VIBRATION CASE 810649

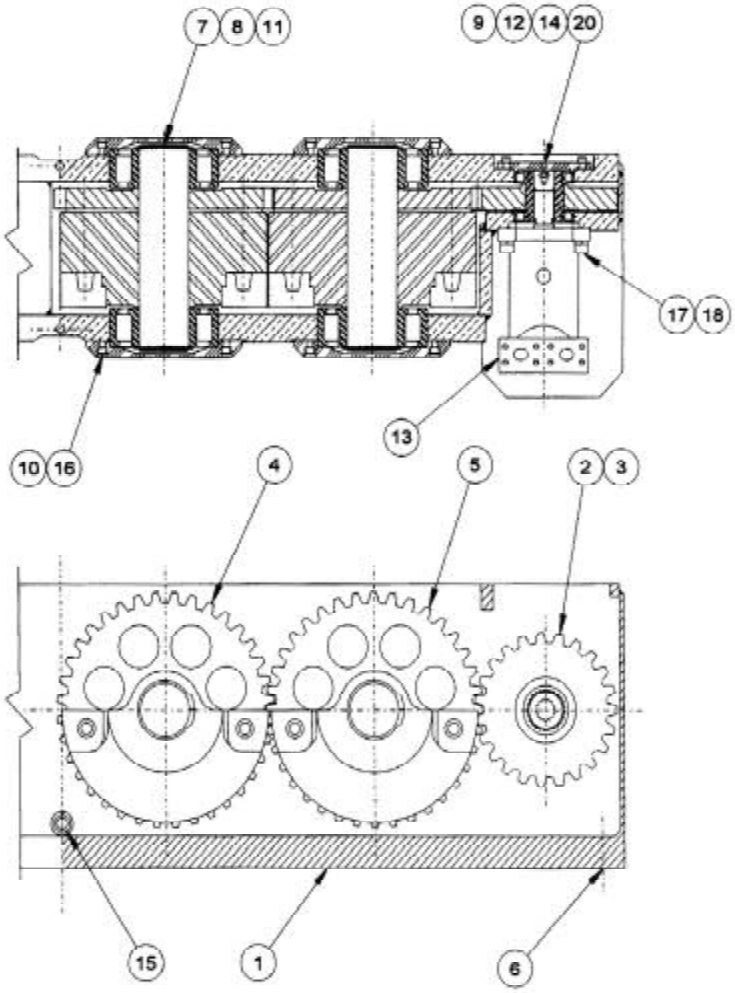

MODEL 44-65
VIBRATORY
DRIVER/EXTRACTOR

# PARTS LIST

VIBRATION CASE 810649

| Item | Part Number | Qty. | Description |
|---|---|---|---|
| 1 | 810647 | 1 | 44 Transmission Case Frame |
| 2 | 110370 | 2 | Pinion Shaft (46) |
| 3 | 110376 | 2 | Pinion Gear |
| 4 | 810673 | 2 | 44 Eccentric Gear Assembly |
| 5 | 810675 | 2 | 44 Eccentric Gear Assembly |
| 6 | 100187 | 2 | FITT2P-12P000000-000S0M7 |
| 7 | 110316 | 8 | Retaining Ring |
| 8 | 110372 | 4 | Eccentric Shaft |
| 9 | 110366 | 2 | Bearing Housing |
| 10 | 110368 | 8 | Bearing Cover |
| 11 | 110314 | 8 | Eccentric Bearing |
| 12 | 110312 | 4 | Motor Bearing |
| 13 | 110328 | 2 | 44-50 Drive Motor (M) |
| 14 | 100822 | 2 | Breather |
| 15 | 100185 | 1 | Sight Gauge |
| 16 | 100119 | 56 | .5-13 X 1.25 Lg SHCS Locwel |
| 17 | 100067 | 8 | .75-10 X 2.5 Lg SHCS Locwel |
| 18 | 400727 | 8 | .75 Hi-Collar Lock Washer |
| 19 | 110444 | 3 | Transmission Oil / Gal. |
| 20 | 100662 | 2 | Filter |

MODEL 44-65
VIBRATORY
DRIVER/EXTRACTOR

# PARTS LIST

TERMINAL MANIFOLD

810709

TO S/N 186521

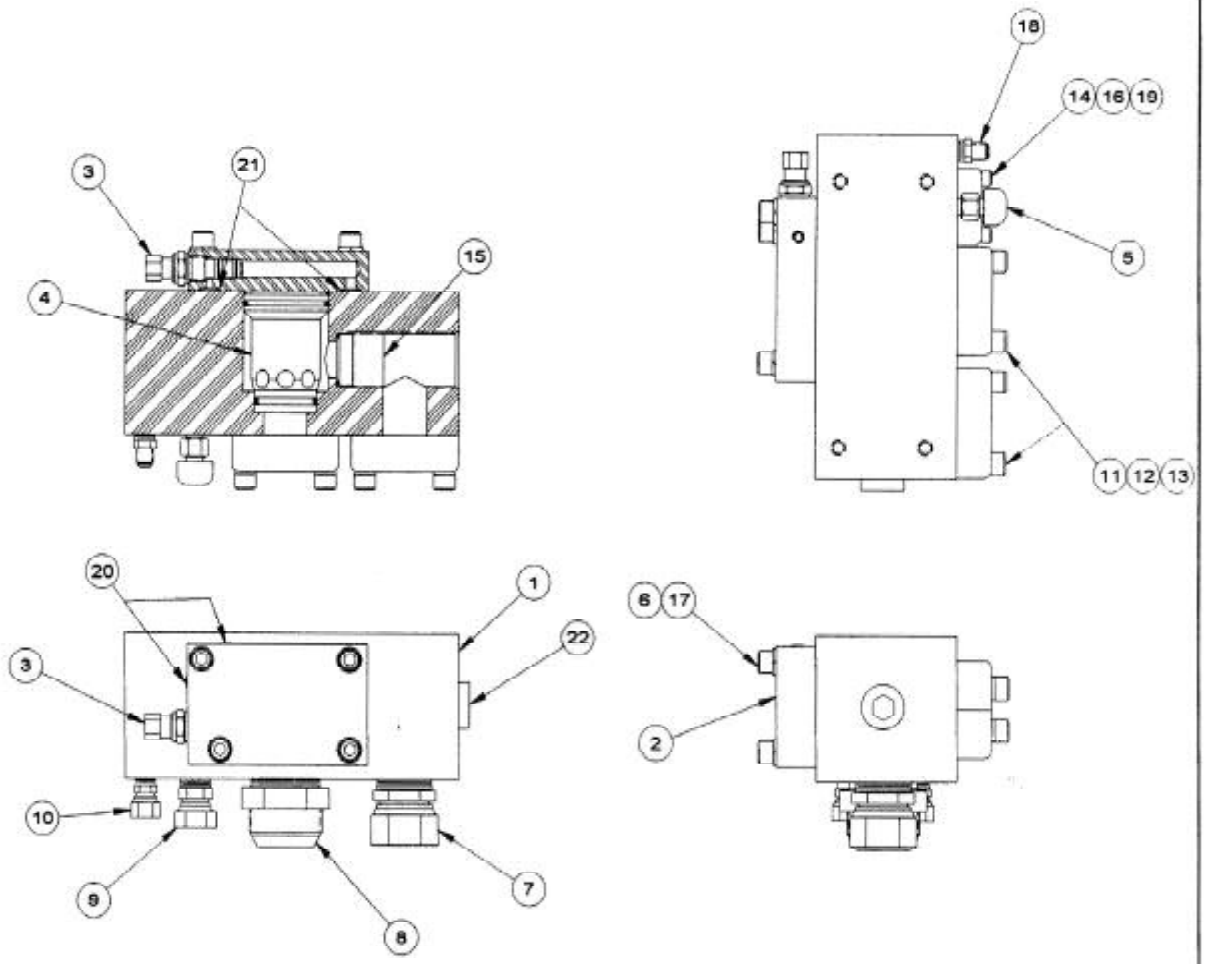

MODEL 44-65
VIBRATORY
DRIVER/EXTRACTOR

# PARTS LIST

TERMINAL MANIFOLD 810709

TO S/N 186521

| Item | Part Number | Qty. | Description |
|---|---|---|---|
| 1 | 110352 | 1 | Terminal Block |
| 2 | 110340 | 1 | Manifold Cap |
| 3 | 110310 | 1 | Brake Valve Relief (RV5) |
| 4 | 110622 | 1 | Cartridge B (BV) |
| 5 | 100032 | 1 | Relief Valve (RV3) |
| 6 | 100121 | 4 | .5 Lock Washer Medium |
| 7 | 110115 | 1 | FITT2S-24P24N000-000H001 |
| 8 | 110269 | 1 | FITT2S-32M24P000-000H001 |
| 9 | 100043 | 1 | FITT2S-12P12N000-000H001 |
| 10 | 100041 | 2 | FITT2S-06PO6N000-000H001 |
| 11 | 100596 | 4 | #24 Split Flange Half |
| 12 | 100119 | 8 | .5-13 X 1.25 Lg SHCS Locwel |
| 13 | 110119 | 2 | 2-225 O-Ring |
| 14 | 100049 | 2 | #12 Split Flange Half |
| 15 | 110296 | 1 | Check Valve (CV6) |
| 16 | 100097 | 1 | 2-214 O-Ring 70 DURO |
| 17 | 400043 | 4 | .5-13 x 2.25 Lg SHCS |
| 18 | 400203 | 2 | FITT2S-06M06P000-000H001 |
| 19 | 100051 | 4 | .375-16 X 1.0 Lg SHCS Locwel |
| 20 | 100646 | 2 | FITT2P-02P000000-000S007 |
| 21 | 140255 | 2 | 2-113 O-Ring |
| 22 | 110298 | 1 | FITT2P-24R000000-000S001 |

MODEL 44-65
VIBRATORY
DRIVER/EXTRACTOR

# PARTS LIST

TERMINAL MANIFOLD 810709

FROM S/N 186522

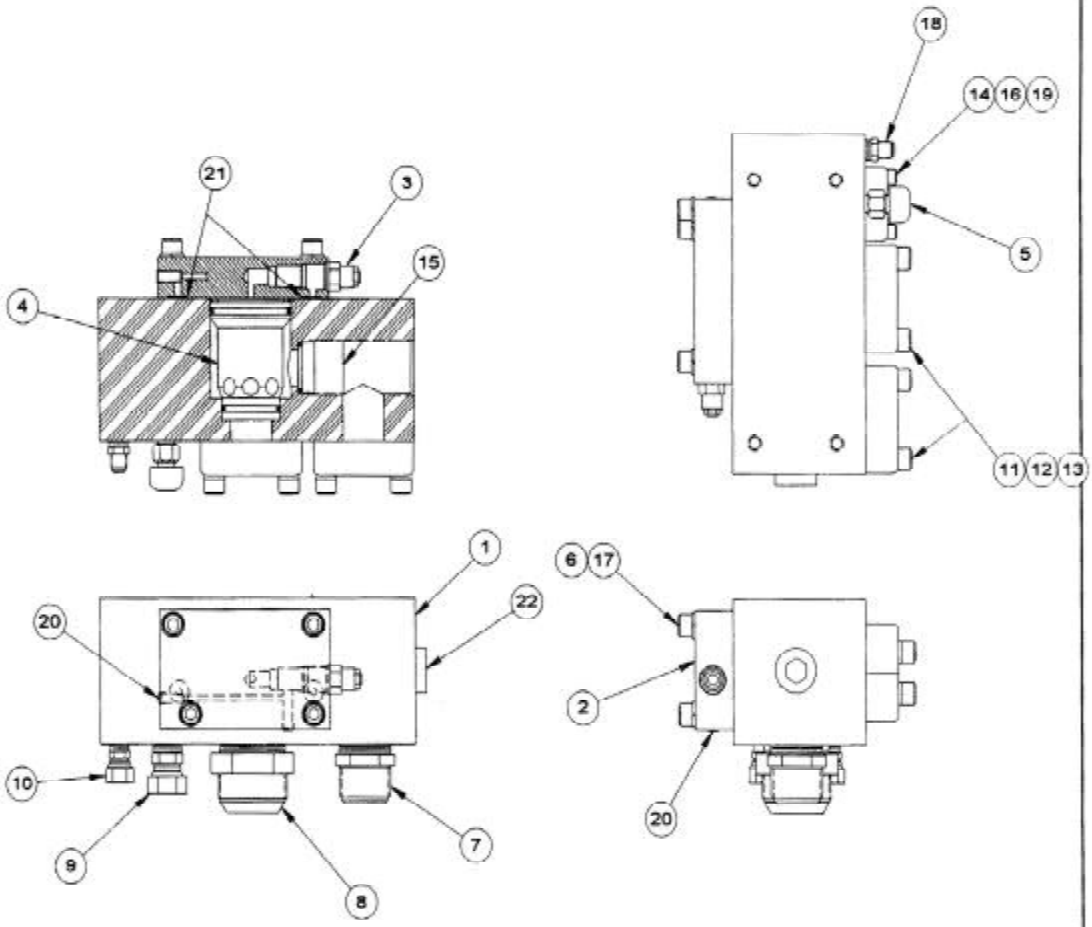

MODEL 44-65
VIBRATORY
DRIVER/EXTRACTOR

# PARTS LIST

TERMINAL MANIFOLD 810709

FROM S/N 186522

| Item | Part Number | Qty. | Description |
|---|---|---|---|
| 1 | 110352 | 1 | Terminal Block |
| 2 | 110252 | 1 | Manifold Cap |
| 3 | 110242 | 1 | Brake Valve Relief (RV5) |
| 4 | 110622 | 1 | Cartridge B (BV) |
| 5 | 100032 | 1 | Relief Valve (RV3) |
| 6 | 100121 | 4 | .5 Lock Washer Medium |
| 7 | 100565 | 1 | FITT2S-24M24P000-000H001 |
| 8 | 110269 | 1 | FITT2S-32M24P000-000H001 |
| 9 | 100043 | 1 | FITT2S-12P12N000-000H001 |
| 10 | 100041 | 2 | FITT2S-06PO6N000-000H001 |
| 11 | 100596 | 4 | #24 Split Flange Half |
| 12 | 100119 | 8 | .5-13 X 1.25 Lg SHCS Locwel |
| 13 | 110119 | 2 | 2-225 O-Ring |
| 14 | 100049 | 2 | #12 Split Flange Half |
| 15 | 110296 | 1 | Check Valve (CV6) |
| 16 | 100097 | 1 | 2-214 O-Ring 70 DURO |
| 17 | 400043 | 4 | .5-13 x 2.25 Lg SHCS |
| 18 | 400203 | 2 | FITT2S-06M06P000-000H001 |
| 19 | 100051 | 4 | .375-16 X 1.0 Lg SHCS Locwel |
| 20 | 100646 | 2 | FITT2P-02P000000-000S007 |
| 21 | 140255 | 2 | 2-113 O-Ring |
| 22 | 110298 | 1 | FITT2P-24R000000-000S001 |

# PARTS LIST

HOSE ASSEMBLIES - INTERCONNECTING 800433

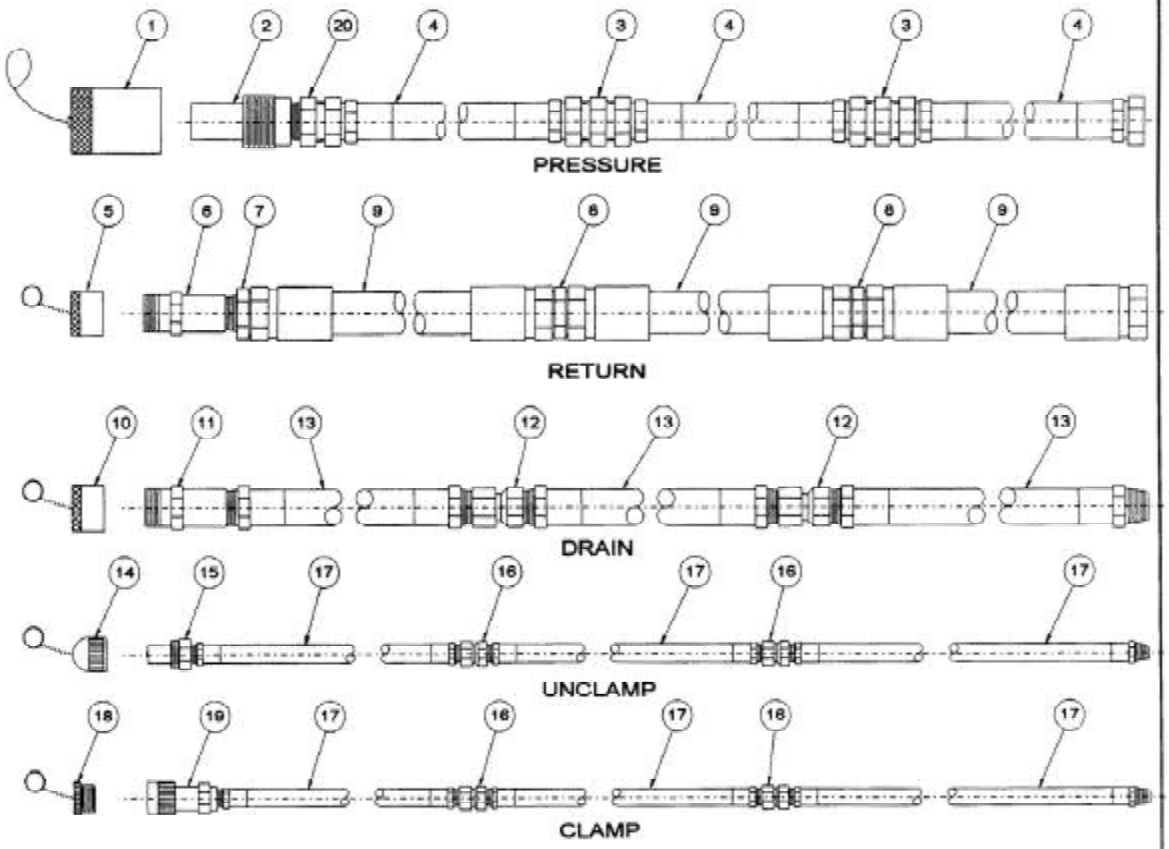

MODEL 44-65
VIBRATORY
DRIVER/EXTRACTOR

# PARTS LIST

HOSE ASSEMBLIES - INTERCONNECTING 800433

| Item | Part Number | Qty. | Description |
|---|---|---|---|
| 1 | 110955 | 1 | Dust Cap (1-1/2) |
| 2 | 110690 | 1 | Male Disconnect (1-1/2) |
| 3 | 110240 | 2 | FITT2S-24M24M000-000H001 |
| 4 | 140923 | 3 | HOSE150PT6J024J024L60000 |
| 5 | 110957 | 1 | Dust Plug (1-1/2) |
| 6 | 110692 | 1 | Female Disconnect (1-1/2) |
| 7 | 110269 | 1 | FITT2S-32M24P000-000H001 |
| 8 | 110271 | 2 | FITT2S-32M32M000-000H001 |
| 9 | 110970 | 3 | HOSE200R09J032J032L60000 |
| 10 | 400253 | 1 | Dust Cap (3/4) |
| 11 | 400251 | 1 | Male Disconnect (3/4) |
| 12 | 100243 | 2 | FITT2S-12Q12N000-000H001 |
| 13 | 100241 | 3 | HOSE075R02P012P012L62000 |
| 14 | 100257 | 1 | Dust Cap (3/8) |
| 15 | 100245 | 1 | Male Disconnect (3/8) |
| 16 | 100249 | 4 | FITT2S-06Q06N000-000H001 |
| 17 | 100247 | 6 | HOSE038R02P006P006L62000 |
| 18 | 100737 | 1 | Dust Plug (3/8) |
| 19 | 100777 | 1 | Female Disconnect (3/8) |
| 20 | 100565 | 1 | FITT2S-24M24P000-000H001 |
| | 130243 | 20 | Rubber Tie Down |

MODEL 44-65
VIBRATORY
DRIVER/EXTRACTOR

# PARTS LIST

POWER UNIT ENCLOSURE 810589

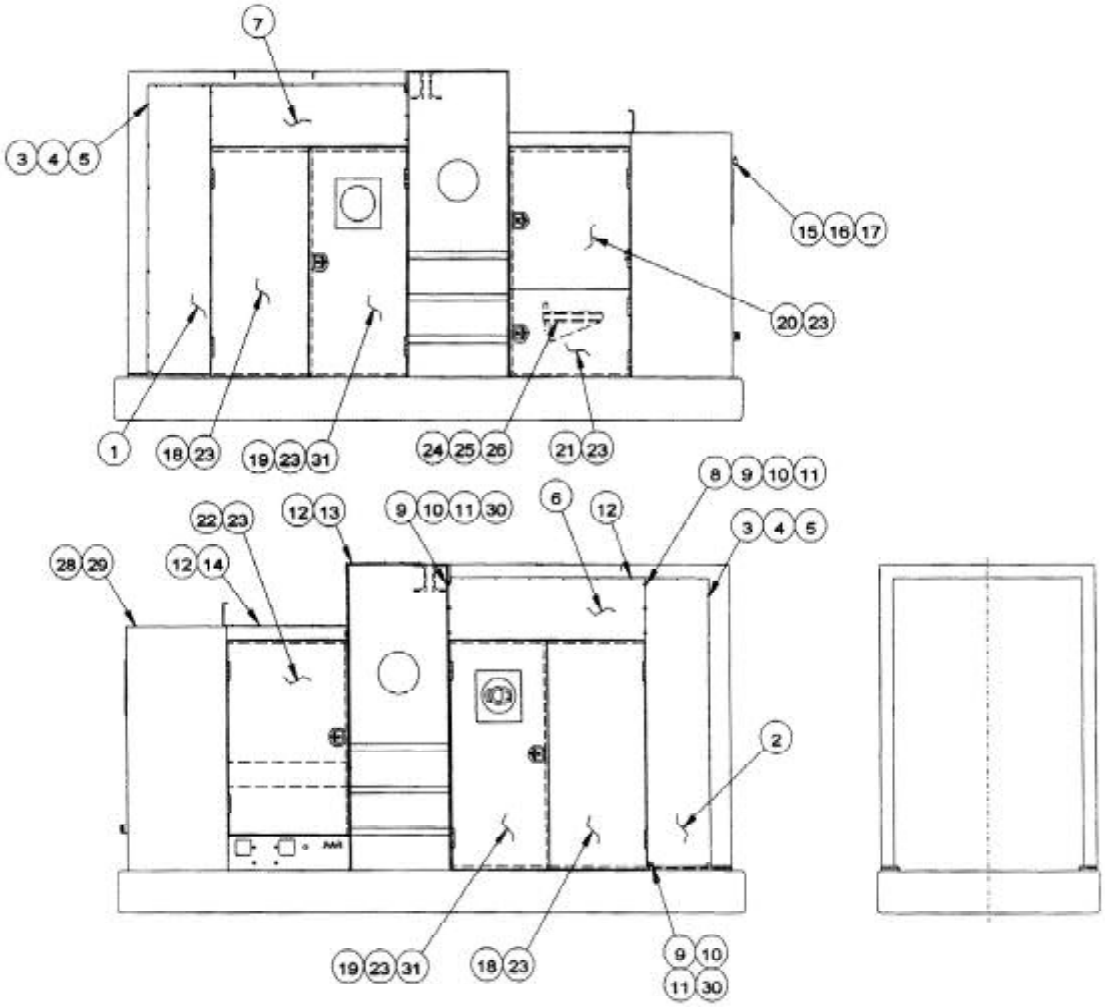

MODEL 44-65
VIBRATORY
DRIVER/EXTRACTOR

# PARTS LIST

POWER UNIT ENCLOSURE 810589

| Item | Part Number | Qty. | Description |
|---|---|---|---|
| 1 | 140621 | 1 | Cover |
| 2 | 140623 | 1 | Cover |
| 3 | 100557 | 20 | .25-20 X .75 Lg SHCS |
| 4 | 100559 | 20 | .25 Lock Washer |
| 5 | 100597 | 32 | .25 Flat Washer |
| 6 | 140613 | 1 | Right Cover Panel |
| 7 | 140661 | 1 | Left Cover Panel |
| 8 | 150179 | 6 | .312-18 X .75 Lg. HHCS |
| 9 | 100287 | 14 | .312 Lock Washer |
| 10 | 100293 | 14 | .312 Flat Washer |
| 11 | 100289 | 14 | .312-18 Hex Nut |
| 12 | 130209 | 32 | .25-14 X 1 Hex Tex |
| 13 | 140653 | 1 | Bale Cover |
| 14 | 140651 | 1 | Unit Cover |
| 15 | 110221 | 1 | Door Hold Down |
| 16 | 110861 | 2 | 10-32 X .5 Lg. PHMS |
| 17 | 100161 | 2 | #10 Lock Washer |
| 18 | 140619 | 2 | Cover Door |
| 19 | 140617 | 2 | Cover Door |
| 20 | 140189 | 1 | Cover Door |
| 21 | 140187 | 1 | Cover Door |
| 22 | 140185 | 1 | Cover Door |
| 23 | 100834 | 14 | 5" Door Hinge |
| 24 | 100600 | 1 | Hex Key Rack |
| 25 | 810045 | 1 | Hex Key Group |
| 26 | 100651 | 1 | 24 V Test Light |
| 27 | 100290 | 2 | J&M Decal |
| 30 | 100309 | 8 | .312-18 x 1.0 Lg BHCS |

MODEL 44-65
VIBRATORY
DRIVER/EXTRACTOR

# PARTS LIST

CONTROL BOX ASSEMBLY 810679

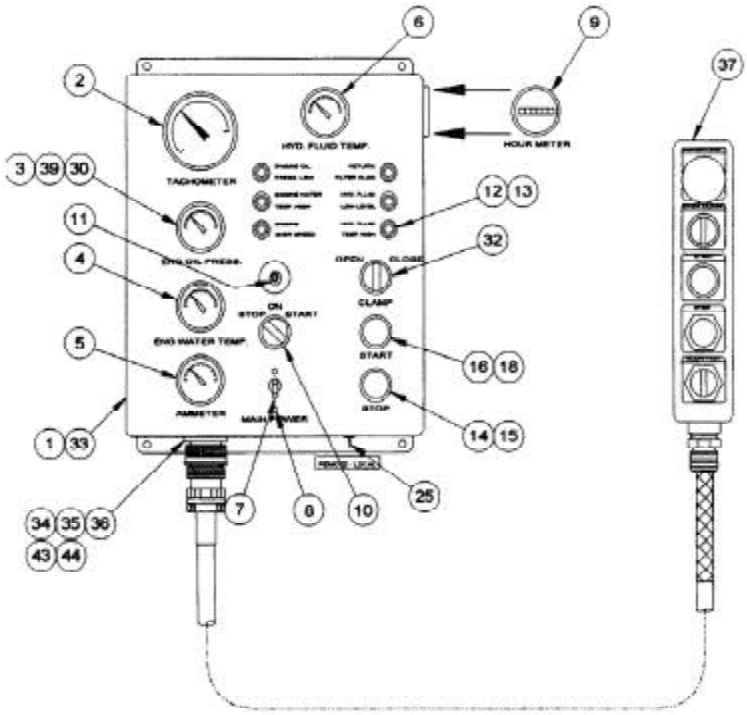


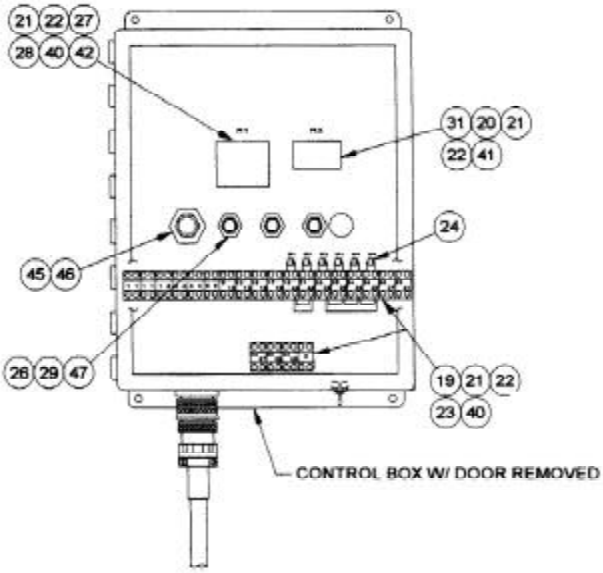

MODEL 44-65
VIBRATORY
DRIVER/EXTRACTOR

# PARTS LIST

CONTROL BOX ASSEMBLY 810679

| Item | Part Number | Qty. | Description |
|---|---|---|---|
| 1 | 110652 | 1 | Control Box |
| 2 | 110650 | 1 | Tachometer |
| 3 | 100329 | 1 | Oil Pressure Gauge |
| 4 | 110697 | 1 | Water Temperature Gage |
| 5 | 110371 | 1 | Ammeter |
| 6 | 110640 | 1 | Hydraulic Temperature Gauge (TS2) |
| 7 | 400141 | 1 | Circuit Breaker-10 A (CB2) |
| 8 | 100331 | 2 | #6-32 X .25 Lg BHCS |
| 9 | 100343 | 1 | Hourmeter (M1) |
| 10 | 110615 | 1 | Engine Start Switch |
| 11 | 110456 | 1 | Murphy Switch |
| 12 | 100355 | 6 | Dialight, Test (L1 - L6) |
| 13 | 130305 | 7 | Warning Light Bulb |
| 14 | 100363 | 1 | Pushbutton (STOP) |
| 15 | 100365 | 1 | Rubber Dust Cap-Red |
| 16 | 110598 | 1 | Start Button (w/ Clamp Light) |
| 18 | 110596 | 1 | Lens |
| 19 | 110569 | 15 | Terminal Mtg. Channel/In |
| 20 | 110861 | 2 | 10-32 X .5 Lg. PHMS |
| 21 | 400163 | 9 | #10-32 Hex Nut |
| 22 | 400161 | 9 | #10 Lock Washer |
| 23 | 110567 | 22 | Terminal Block |
| 24 | 100413 | 7 | Diode (D1 - D6 & D8) |
| 25 | 140361 | 1 | Toggle Switch |
| 26 | 110841 | 3 | .5 Plastic Bushing |
| 27 | 140281 | 4 | Relay Mtg. Track/In. |
| 28 | 110584 | 1 | Relay (R1) |
| 29 | 110843 | 3 | .5 Lock Nut |
| 30 | 100333 | 1 | FITT2L-04E02Q000-000H002 |
| 31 | 110604 | 1 | Relay (R3) |
| 32 | 130155 | 1 | Switch (OPEN / CLOSE) |
| 33 | 140917 | 1 | 650 Label Group |
| 34 | 110763 | 1 | Female Amphenol Insert |
| 35 | 100397 | 1 | Amphenol Receptacle |
| 36 | 110754 | 4 | #6-32 X .375 Lg RHMS |
| 37 | 800395 | 1 | 570-950 Pendant Asm. |
| 39 | 110415 | 11 | .250 Oil Pressure Tube/Ft |
| 40 | 110649 | 7 | #10-32 X .375 Lg PHMS |

# PARTS LIST

CONTROL BOX ASSEMBLY 810679

| Item | Part Number | Qty. | Description |
|---|---|---|---|
| 41 | 300671 | 2 | #10 Flat Washer |
| 42 | 140345 | 1 | Channel Bracket |
| 43 | 110696 | 4 | #6 Lock Washer |
| 44 | 110694 | 4 | #6-32 Hex Nut |
| 45 | 110693 | 1 | 1" 90 Deg Compress Fitting |
| 46 | 110839 | 1 | 1.0 Plastic Bushing |
| 47 | 100853 | 3 | 90 Deg S/O Comp Fitting |

MODEL 44-65
VIBRATORY
DRIVER/EXTRACTOR

# PARTS LIST

570-950 PENDANT ASSEMBLY

800395

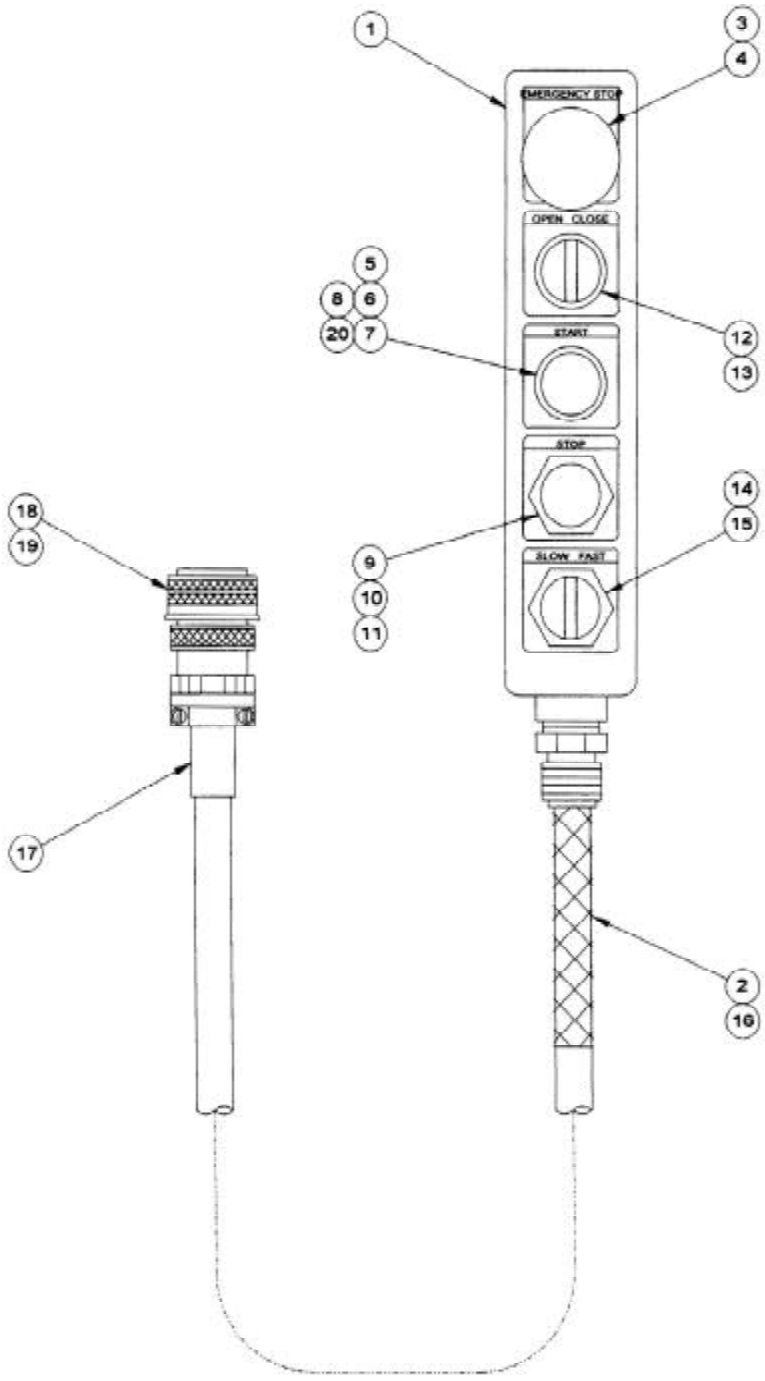

MODEL 44-65
VIBRATORY
DRIVER/EXTRACTOR

# PARTS LIST

570-950 PENDANT ASSEMBLY 800395

| Item | Part Number | Qty. | Description |
|---|---|---|---|
| 1 | 130505 | 1 | Pendant Box |
| 2 | 110603 | 1 | 1.0 Strain Relief |
| 3 | 130507 | 1 | Emergency Stop Button |
| 4 | 130509 | 1 | Emergency Stop Label |
| 5 | 110598 | 1 | Start Button (w/ Clamp Light) |
| 6 | 110594 | 1 | Guard |
| 7 | 110596 | 1 | Lens |
| 8 | 100407 | 1 | Start Nameplate |
| 9 | 100363 | 1 | Pushbutton (STOP) |
| 10 | 100405 | 1 | Stop Nameplate |
| 11 | 100365 | 1 | Rubber Dust Cap-Red |
| 12 | 130155 | 1 | Switch (OPEN / CLOSE) |
| 13 | 100401 | 1 | Open / Close Nameplate |
| 14 | 100566 | 1 | Switch (SLOW - FAST) |
| 15 | 100562 | 1 | Slow-Fast Nameplate |
| 16 | 100560 | 50 | Pendant Cable / Ft |
| 17 | 100375 | 1 | Strain Relief-Amphenol |
| 18 | 110761 | 1 | Male Amphenol Insert-Plug |
| 19 | 100395 | 1 | Amphenol Plug |
| 20 | 130305 | 1 | Warning Light Bulb |

# PARTS LIST

POWER UNIT-INTERNAL (right side and left side) 800431

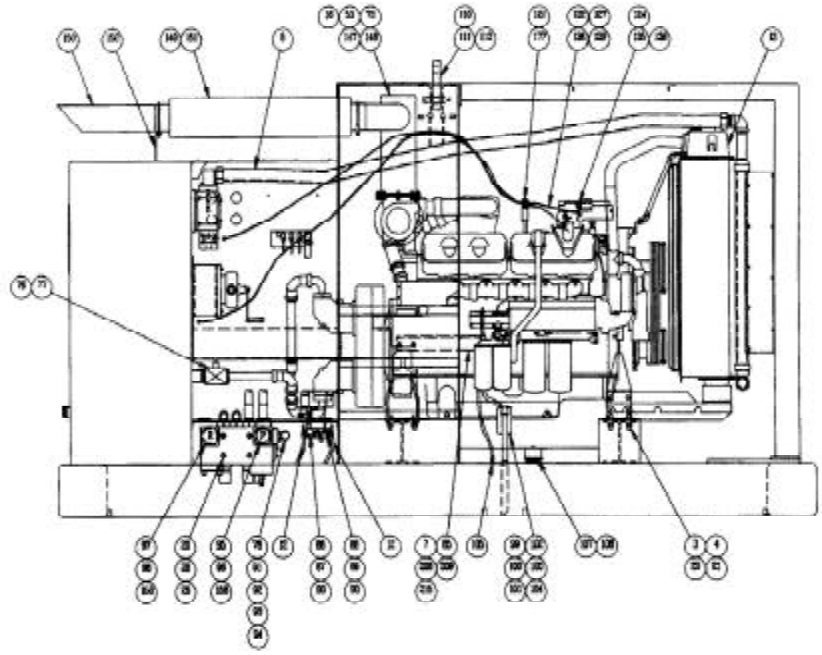

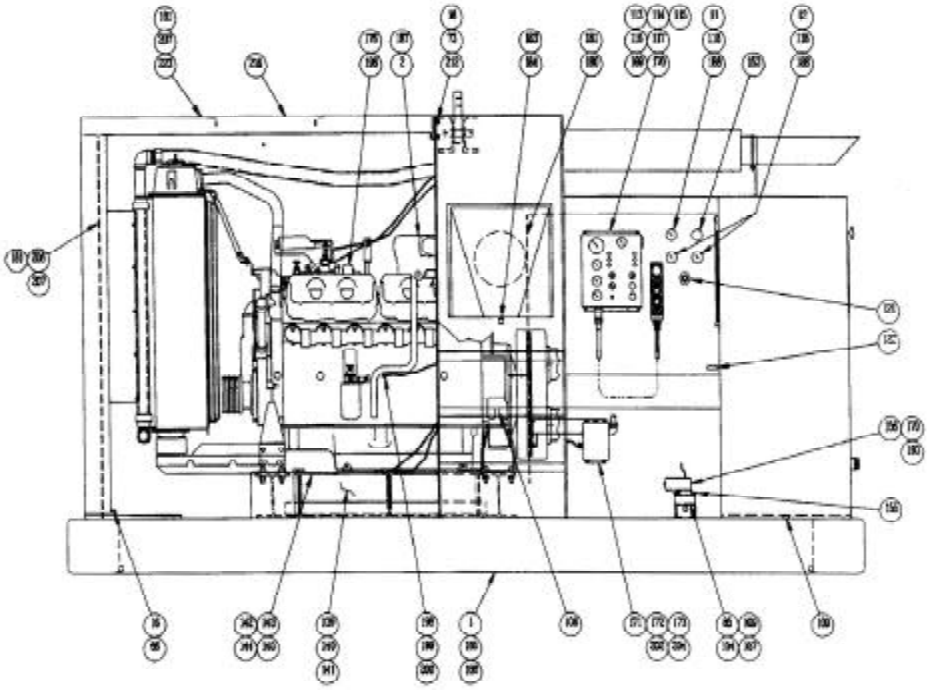

MODEL 44-65
VIBRATORY
DRIVER/EXTRACTOR

# PARTS LIST

POWER UNIT-INTERNAL
(front view, reservoir detail, gaer box detail and manifoldl detail)

800431

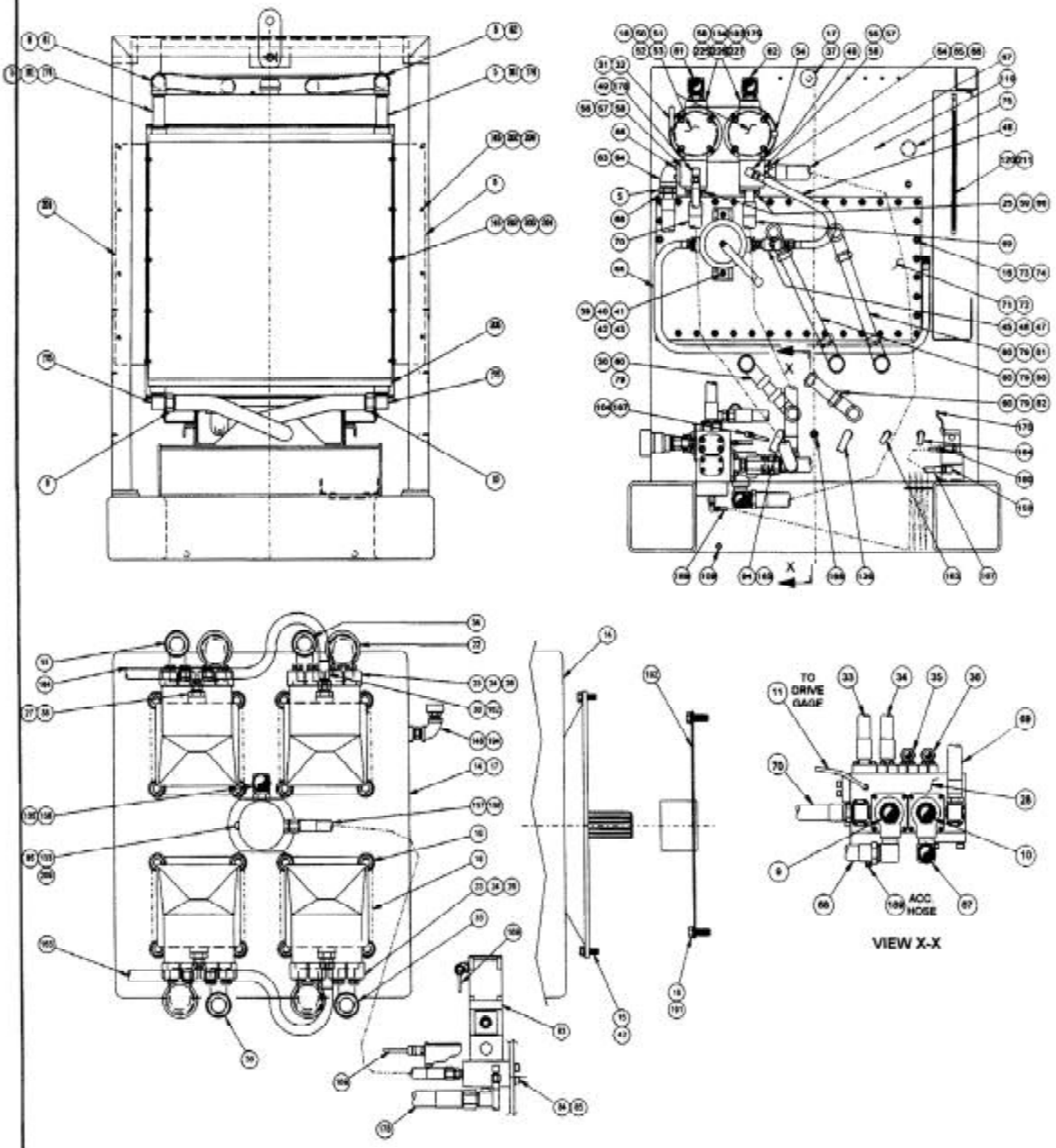

MODEL 44-65
VIBRATORY
DRIVER/EXTRACTOR

# PARTS LIST

POWER UNIT-INTERNAL (electric throttle detail) 800431

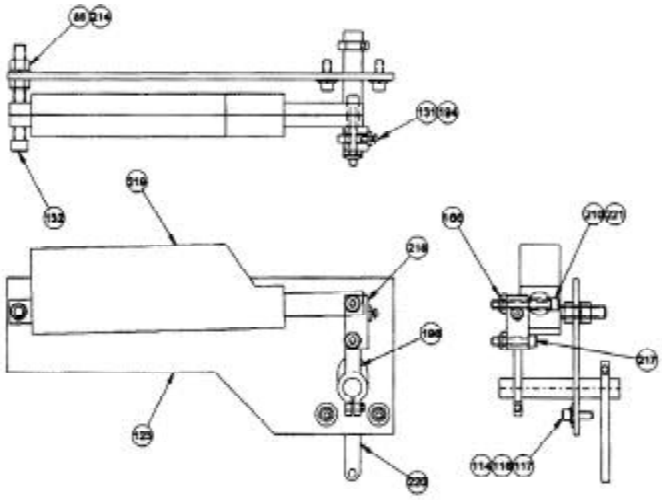

| Item | Part Number | Qty. | Description |
|---|---|---|---|
| 1 | 810587 | 1 | 950 Subbase Asm. |
| 2 | 140871 | 1 | 3412DIT Engine (E) |
| 3 | 100067 | 12 | .75-10 X 2.5 Lg SHCS Locwel |
| 4 | 100587 | 12 | .75-10 Hex Nut |
| 5 | 140523 | 3 | FITT2S-32M32P000-000H001 |
| 6 | 140857 | 1 | Left Cooler Bracket |
| 7 | 100007 | 4 | .625 Lock Washer-Medium |
| 8 | 140847 | 20 | Fire Sleeve / Ft |
| 9 | 140753 | 1 | HOSE200R01J032J032L17200 |
| 10 | 140755 | 1 | HOSE200R01J032J032L18300 |
| 11 | 130393 | 1 | HOSE019AQ1J004J004L11000 |
| 12 | 140735 | 2 | HOSE025R02J004J004L11700 |
| 13 | 100726 | 15 | Antifreeze/Gal |
| 14 | 140869 | 1 | Multi-Pump Adapter |
| 15 | 100462 | 12 | .437-14 UNC X 1.25 Lg HHCS |
| 16 | 100121 | 78 | .5 Lock Washer Medium |
| 17 | 110444 | 1 | Transmission Oil / Gal. |
| 18 | 100406 | 4 | Main Pump (P1) |
| 19 | 100782 | 16 | .75-10 Flange Nut |
| 20 | 100069 | 16 | .75 Lock Washer Medium |
| 21 | 100589 | 12 | .75 Flat Washer |
| 22 | 100458 | 4 | 90 Deg. Flanged Adapter 20PH |
| 23 | 110986 | 16 | #20 PH Split Flange Half |
| 24 | 100037 | 8 | 2-222 O-Ring 70 DURO |
| 25 | 110119 | 2 | 2-225 O-Ring |

MODEL 44-65
VIBRATORY
DRIVER/EXTRACTOR

# PARTS LIST

POWER UNIT-INTERNAL 800431

| Item | Part Number | Qty. | Description |
|---|---|---|---|
| 26 | 400739 | 32 | .5-13 UNC X 2 Lg HHCS |
| 27 | 140757 | 2 | FITT2T-08M08M08J-000H001 |
| 28 | 810677 | 1 | 650 Control Manifold Asm |
| 29 | 400275 | 4 | .75-10 X 1.5 Lg SHCS |
| 30 | 140873 | 1 | 1.50 Sch40 Pipe X 4.75lg |
| 31 | 100775 | 1 | Visual Indicator (GA5) |
| 32 | 100838 | 1 | FITT2L-02P04Q000-00L0001 |
| 33 | 140867 | 1 | HOSE125PT6H920J020L03500 |
| 34 | 140865 | 1 | HOSE125PT6H920J020L02500 |
| 35 | 140863 | 1 | HOSE125PT6H920H020L06400 |
| 36 | 140861 | 1 | HOSE125PT6H920H020L05600 |
| 37 | 100455 | 1 | Breather |
| 38 | 110325 | 4 | FITT2S-12R08M000-000H001 |
| 39 | 100447 | 1 | Hand Pump (MP) |
| 40 | 130091 | 1 | Pump Mounting Bracket |
| 41 | 100439 | 2 | .437-X1.75 Lg SHCS |
| 42 | 100443 | 14 | .437 Lock Washer |
| 43 | 400153 | 2 | .437 Flat Washer |
| 44 | 400215 | 1 | HOSE100R01P016P016L08400 |
| 45 | 100449 | 1 | FITT2S-16P16P000-000H001 |
| 46 | 100451 | 1 | Check Valve (CV8) |
| 47 | 300119 | 1 | FITT2S-16P12M000-000H001 |
| 48 | 300193 | 1 | HOSE075R01J012J012L02350 |
| 49 | 100489 | 2 | FITT2L-12M12P000-0000001 |
| 50 | 140179 | 2 | Return Filter (F2) |
| 51 | 140403 | 2 | Filter Element |
| 52 | 140543 | 2 | Return Filter Gasket |
| 53 | 100513 | 16 | .5-13 X 1.5 Lg SHCS |
| 54 | 140413 | 1 | Return Filter Press. Switch (PS2) |
| 55 | 140649 | 1 | Filter Adapter |
| 56 | 140663 | 1 | Filter Adapter |
| 57 | 100025 | 8 | .5-13 X 4.5 Lg SHCS |
| 58 | 400379 | 4 | 2-232 O-Ring |
| 59 | 100596 | 4 | #24 Split Flange Half |
| 60 | 140859 | 4 | FITT2S-24P24P000-1270301 |
| 61 | 140845 | 1 | HOSE200R01J032J032L13900 |
| 62 | 140849 | 1 | HOSE200R01J032J032L15000 |
| 63 | 140775 | 1 | 2"Npt 90 Deg Flanged Adapter |
| 64 | 140233 | 2 | 2-228 O-Ring |
| 65 | 140261 | 2 | #32 PA Split Flange Half |

MODEL 44-65
VIBRATORY
DRIVER/EXTRACTOR

# PARTS LIST

POWER UNIT-INTERNAL 800431

| Item | Part Number | Qty. | Description |
|---|---|---|---|
| 66 | 100119 | 22 | .5-13 X 1.25 LG SHCS Locwel |
| 67 | 140729 | 1 | HOSE200R01J032F032L09000 |
| 68 | 140727 | 1 | HOSE200RO1J032J032L09900 |
| 69 | 140723 | 1 | HOSE150RO1J024F024L04800 |
| 70 | 140725 | 1 | HOSE150R01J024F024L08700 |
| 71 | 140115 | 1 | Cover Plate |
| 72 | 140219 | 1 | Cover Plate Gasket |
| 73 | 100485 | 56 | .5-13 Hex Nut |
| 74 | 100483 | 42 | .5 Flat Washer |
| 75 | 100314 | 1 | Float Switch (FS) |
| 76 | 140887 | 4 | FITT2S-40P24Q000-000H006 |
| 77 | 400117 | 4 | Stop Cock |
| 78 | 140889 | 1 | FITT2S-16Q12M000-000H001 |
| 79 | 140877 | 8 | 1.5-90 Deg Flexible Coupling |
| 80 | 140879 | 1 | 1.50 Sch 40 Pipe 17.75 Lg |
| 81 | 140881 | 1 | 1.50 Sch 40 Pipe 16.50 Lg |
| 82 | 140883 | 1 | 1.50 Sch 40 Pipe 7.00 Lg |
| 83 | 810449 | 1 | 570C Clamp Manifold Assembly |
| 84 | 100143 | 3 | .375-16 X 1.25 Lg SHCS Locwel |
| 85 | 400149 | 12 | .375 Lock Washer |
| 86 | 100245 | 1 | .375 Male Disconnect (QD4) |
| 87 | 100257 | 1 | .375 Dust Cap |
| 88 | 100777 | 1 | .375 Female Disconnect (QD3) |
| 89 | 100737 | 1 | .375 Dust Plug |
| 90 | 130203 | 2 | FITT2S-06P06P000-0300401 |
| 91 | 120095 | 1 | FITT2S-16P16B000-000H001 |
| 92 | 400095 | 1 | .75 Female Disconnect (QD5) |
| 93 | 400121 | 1 | .75 Dust Plug |
| 94 | 140919 | 1 | HOSE100R01J016J016L03600 |
| 95 | 110692 | 1 | 1.5 Female Disconnect (QD2) |
| 96 | 110957 | 1 | 1.5 Dust Plug |
| 97 | 110690 | 1 | 1.5 Male Disconnect (QD1) |
| 98 | 110955 | 1 | 1.5 Dust Cap |
| 99 | 120611 | 1 | Water Seperator Asm. |
| 100 | 120613 | 1 | Water Seperator Element |
| 101 | 110377 | 1 | FITT2L-16P16Q000-0000306 |
| 102 | 120425 | 1 | FITT2S-16P16P000-1200301 |
| 103 | 100715 | 1 | FITT2S-16P06Q000-000H001 |
| 104 | 400227 | 2 | FITT2L-06M06P000-0000001 |
| 105 | 140913 | 1 | FITT2S-06P04M000-000H001 |

MODEL 44-65
VIBRATORY
DRIVER/EXTRACTOR

# PARTS LIST

POWER UNIT - INTERNAL 800431

| Item | Part Number | Qty. | Description |
|---|---|---|---|
| 106 | 100408 | 1 | Engine Tach Pick-up (SENDER) |
| 107 | 100417 | 1 | FITT2C-48Q000000-0000306 |
| 108 | 100419 | 1 | Petcock |
| 109 | 100423 | 4 | FITT2P-08P000000-000S007 |
| 110 | 140157 | 1 | Link |
| 111 | 140291 | 1 | Pin |
| 112 | 300375 | 2 | .312 X 5 Lg Cotter Pin |
| 113 | 810679 | 1 | 650 Control Box Asm |
| 114 | 100557 | 6 | .25-20 x .75 Lg SHCS |
| 115 | 100598 | 4 | .25-20 Hex Nut |
| 116 | 100597 | 10 | .25 Flat Washer |
| 117 | 100559 | 6 | .25 Lock Washer |
| 118 | 110600 | 3 | 0-6000 Psi Gage (GA1 - GA3) |
| 119 | 110590 | 1 | Hydraulic Temperature Switch (TS1) |
| 120 | 110355 | 1 | Level Gauge |
| 121 | 130255 | 1 | Engine Throttle |
| 122 | 140851 | 1 | Emergency Stop Cable(950) |
| 123 | 110254 | 1 | Elec Throttle Bracket |
| 124 | 110676 | 2 | Cotter Pin .093 X 1.0 Lg |
| 125 | 110966 | 1 | Shut-Down Arm |
| 126 | 110964 | 2 | Pivot |
| 127 | 110962 | 1 | Clamp |
| 128 | 110960 | 1 | Shim |
| 129 | 100429 | 2 | Throttle Cable Seal |
| 131 | 110827 | 1 | 10-32 X .75 BHCS S.S. |
| 132 | 110913 | 1 | .38-16 X 3.00 Lg SHCS |
| 133 | 140839 | 1 | Clamp Pump (P2) |
| 134 | 100027 | 8 | .5 Hi-Collar Lock Washer |
| 135 | 100938 | 1 | FITT2L-16M12R000-000H001 |
| 136 | 140875 | 1 | HOSE100R01P016J016L04400 |
| 137 | 100139 | 1 | FITT2S-08M08R000-000H001 |
| 138 | 110470 | 1 | HOSE050PT4J008J008L03500 |
| 139 | 100529 | 2 | Battery (EB1 & EB2) |
| 140 | 140359 | 1 | Battery Cable-6 |
| 141 | 100537 | 2 | Battery Cable-24" |
| 142 | 810169 | 1 | Dual Battery Hold Down |
| 143 | 400231 | 3 | Hold Down Stud |
| 144 | 100831 | 3 | .312 Wing Nut |
| 145 | 100293 | 21 | .312 Flatwasher |

# PARTS LIST

POWER UNIT - INTERNAL 800431

| Item | Part Number | Qty. | Description |
|---|---|---|---|
| 146 | 140921 | 1 | FITT2L-08Q08Q00-000H001 |
| 147 | 140629 | 1 | Exhaust Adapter |
| 148 | 140787 | 1 | Exhaust Adapter Gasket |
| 149 | 110504 | 2 | Muffler |
| 150 | 140789 | 2 | Exhaust Outlet |
| 151 | 100297 | 4 | Exhaust Pipe Clamp |
| 152 | 110512 | 2 | Muffler Support |
| 153 | 130463 | 1 | 2" Plug |
| 154 | 140675 | 1 | Subplate |
| 155 | 100898 | 1 | Sandwich Relief (RV1) |
| 156 | 140665 | 1 | Solenoid Valve (V2) |
| 157 | 100017 | 4 | .375-16 X 2.0 Lg SHCS Locwel |
| 158 | 140891 | 2 | FITT2S-32P24Q000-000H008 |
| 159 | 110704 | 1 | FITT2L-08P06M000-0000001 |
| 160 | 140909 | 1 | FITT2S-08P04M000-000H001 |
| 161 | 140795 | 2 | FITT2L-32Q32Q000-0000001 |
| 162 | 100486 | 2 | HOSE050R01J008J008L01450 |
| 163 | 140741 | 1 | HOSE050R01J008J008L03800 |
| 164 | 140743 | 1 | HOSE050RO1J008J008L07000 |
| 165 | 140759 | 1 | FITT2S-12P16M000-000H001 |
| 166 | 100422 | 2 | .25-20 UNC Esna Nut |
| 167 | 110633 | 1 | HOSE038R02J006J006L0370S |
| 168 | 100183 | 1 | FITT2P-12P000000-000S007 |
| 169 | 110231 | 2 | S/O Cord 12' Lg |
| 170 | 110229 | 1 | S/O Cord 6' Lg |
| 171 | 810145 | 1 | 570 Engine Junction Box |
| 172 | 110785 | 30 | 1"Sealtight/In |
| 173 | 140791 | 1 | Junction Box Bracket |
| 174 | 140885 | 2 | FITT2S-32P32P000-0800301 |
| 175 | 810009 | 4 | FITT2L-32M32P000-00000F1 |
| 176 | 110447 | 1 | Tack Drive Adapter |
| 177 | 110452 | 1 | Cable Bracket |
| 178 | 140747 | 1 | HOSE075R01J012J012L08800 |
| 179 | 110909 | 1 | .75 X 15 Lg Pipe Sch 40 |
| 180 | 140799 | 1 | Hose Shield |
| 181 | 130209 | 47 | .25-14 X 1 Hex Tex |
| 182 | 100746 | 2 | FITT2L-48P48Q000-0000406 |
| 183 | 140507 | 2 | FITT2S-02Q000000-0000306 |
| 184 | 140801 | 2 | FITT2S-02P02P000-000H001 |

MODEL 44-65
VIBRATORY
DRIVER/EXTRACTOR

# PARTS LIST

POWER UNIT - INTERNAL 800431

| Item | Part Number | Qty. | Description |
|---|---|---|---|
| 187 | 400247 | 76 | Engine Oil/Quart |
| 188 | 100321 | 3 | FITT2L-04M04Q000-0000001 |
| 189 | 110680 | 1 | HOSE019AQ1J004J004L40000 (AC) |
| 191 | 140803 | 8 | .5-13UNC X 1.00 Lg HHCS |
| 192 | 140805 | 1 | Flex Plate |
| 193 | 140387 | 1 | Orifice-.059 |
| 194 | 100705 | 1 | FITT2S-08P08P000-000H001 |
| 195 | 400163 | 1 | #10-32 Hex Nut |
| 196 | 810617 | 1 | Modified Throttle Arm |
| 197 | 110972 | 1 | Over Speed Switch |
| 198 | 110369 | 1 | FITT2S-06P04Q000-000H001 |
| 199 | 110871 | 1 | FITT2V-04P04E000-000H002 |
| 200 | 110415 | 10 | .250 Oil Pressure Tube/Ft |
| 201 | 140855 | 1 | Right Cooler Bracket |
| 202 | 100105 | 20 | .312-18 X 1.0 Lg SHCS Locwel |
| 203 | 100289 | 10 | .312-18 Hex Nut |
| 204 | 100287 | 20 | .312 Lock Washer |
| 205 | 140237 | 1 | Heat Exchanger (HE) |
| 206 | 140625 | 1 | Intake Grill |
| 207 | 130227 | 37 | .25 Fender Washer |
| 208 | 100575 | 4 | .625-11 x 1.25 Lg SHCS |
| 209 | 140453 | 5 | .375-16 x 1.0 Lg. HHCS |
| 210 | 110244 | 1 | Tube .38 Od .28 Id X .88 Lg |
| 211 | 140415 | 475 | Hydraulic Fluid/Gal |
| 212 | 100163 | 6 | .5-13 X 1.75 Lg SHCS Locwel |
| 214 | 100535 | 2 | .375 -16 Hex Nut |
| 215 | 140807 | 1 | Fuel Filter Housing Bracket |
| 216 | 810589 | 1 | 950 Cover Group |
| 217 | 100595 | 1 | .25-20 X 1.25 Lg SHCS |
| 218 | 110448 | 1 | Adjustable Link |
| 219 | 110246 | 1 | Electric Actuator (24V) (M) |
| 220 | 110446 | 1 | Throttle Arm |
| 221 | 100631 | 1 | .25-20 X 2.0 Lg SHCS |
| 223 | 140627 | 1 | Top Grill |
| 225 | 400233 | 2 | FITT2S-40P32Q000-000H306 |
| 226 | 100946 | 2 | MFP Flange |
| 227 | 100011 | 8 | .5-13 X 2.0 Lg SHCS |

# PARTS LIST

JUNCTION BOX 810145

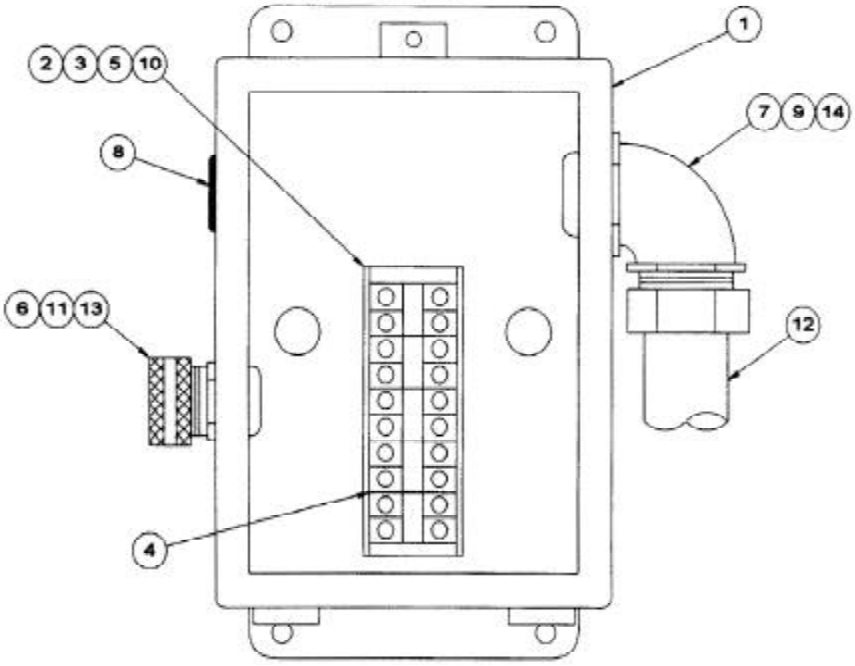


| Item | Part Number | Qty. | Description |
|---|---|---|---|
| 1 | 110699 | 1 | Junction Box |
| 2 | 400161 | 2 | #10 Lock Washer |
| 3 | 400163 | 2 | 10-32 Hex Nut |
| 4 | 110567 | 5 | Terminal Block |
| 5 | 110569 | 1 | Terminal Mounting Channel |
| 6 | 100855 | 1 | Straight Wire Connector |
| 7 | 110693 | 1 | 90° Connector |
| 8 | 110701 | 1 | Grommet |
| 9 | 110845 | 1 | Lock Nut (1.0) |
| 10 | 110649 | 2 | 10-32 x .375 Lg PHMS |
| 11 | 110841 | 1 | Plastic Bushing (.5) |
| 12 | 110785 | 61 | 1" Sealtight / Inch |
| 13 | 110843 | 1 | Lock Nut (.5) |
| 14 | 110839 | 1 | Plastic Bushing (1.0) |

# PARTS LIST

CONTROL MANIFOLD ASSEMBLY 810677

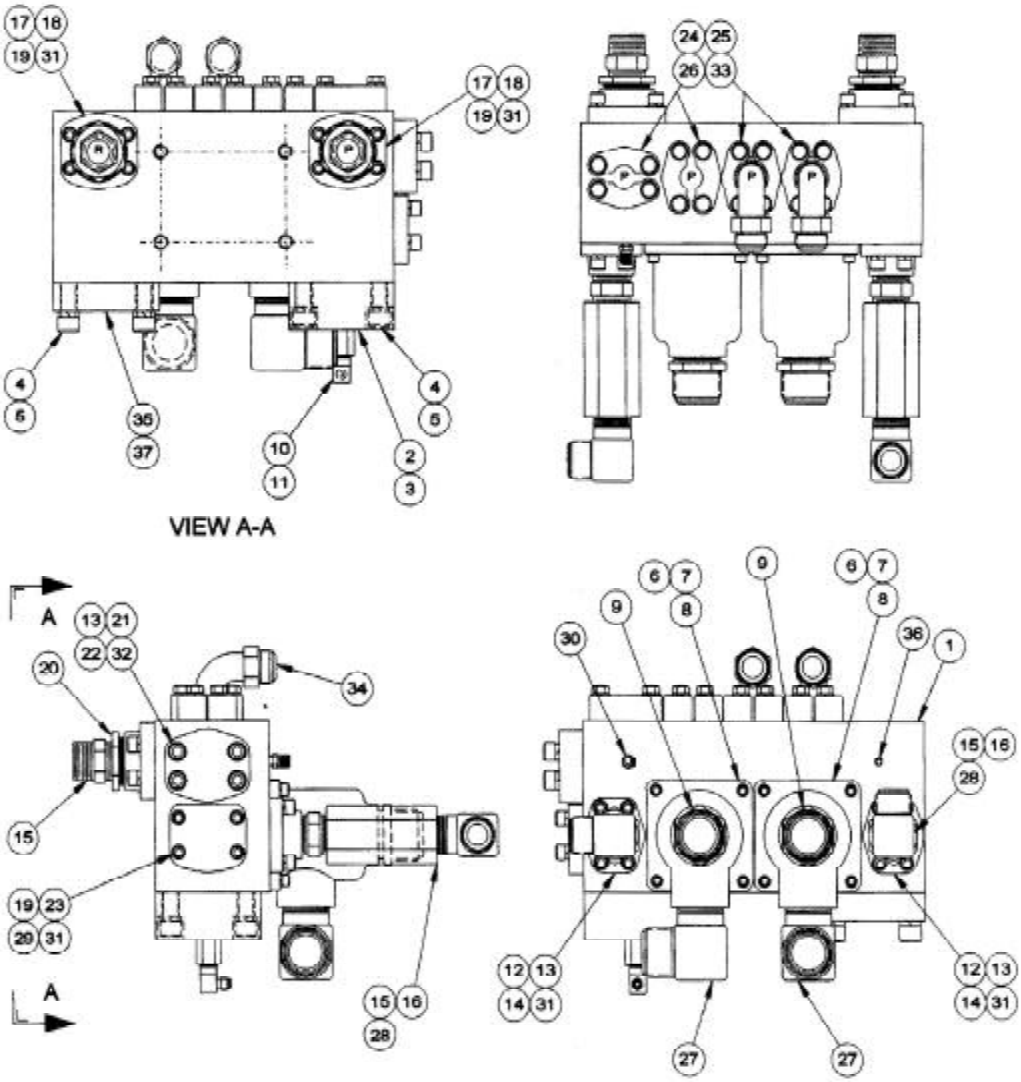

# PARTS LIST

CONTROL MANIFOLD ASSEMBLY 810677

| Item | Part Number | Qty. | Description |
|---|---|---|---|
| 1 | 140611 | 1 | 950 Drive Manifold Block |
| 2 | 140669 | 1 | Cartridge Valve (C2) |
| 3 | 140671 | 1 | Cartridge Cover |
| 4 | 400545 | 8 | .75-10 UNC X 3 Lg SHCS |
| 5 | 400727 | 8 | .75 Hi-Collar Lock Washer |
| 6 | 110628 | 2 | Cooler Valve (V3) |
| 7 | 100143 | 8 | .375-16 X 1.25 Lg SHCS Locwel |
| 8 | 400149 | 8 | .375 Lock Washer |
| 9 | 140523 | 2 | FITT2S-32M32P000-000H001 |
| 10 | 140681 | 1 | FITT2S-08S08Q000-000H001 |
| 11 | 140911 | 1 | FITT2L-08P04M000-0000001 |
| 12 | 110057 | 2 | 1.5 Solid Flange |
| 13 | 110119 | 3 | 2-225 O-Ring |
| 14 | 100011 | 8 | .5-13 X 2.0 Lg SHCS |
| 15 | 110037 | 4 | FITT2S-24P24P000-000H001 |
| 16 | 130339 | 2 | 1.5 Check Valve (CV3 & CV4) |
| 17 | 140895 | 2 | 2.00 Solid Flange |
| 18 | 110735 | 8 | .5-13 X 2.5 Lg SHCS |
| 19 | 140233 | 3 | 2-228 O-Ring |
| 20 | 140897 | 2 | FITT2S-32P24Q000-000H308 |
| 21 | 140673 | 1 | #24PH Blank Flange |
| 22 | 140227 | 4 | .625-11 x 2.0 Lg SHCS |
| 23 | 400937 | 1 | 2" Blank Flange |
| 24 | 110986 | 8 | #20 PH Split Flange Half |
| 25 | 100037 | 4 | 2-222 O-Ring 70 DURO |
| 26 | 400739 | 16 | .5-13 UNC X 2 Lg HHCS |
| 27 | 810009 | 2 | FITT2L-32M32P000-00000F1 |
| 28 | 100588 | 2 | FITT2L-24M24P000-0000001 |
| 29 | 100513 | 4 | .5-13 X 1.5 Lg SHCS |
| 30 | 140267 | 1 | FITT2S-04M02P000-000H001 |
| 31 | 100027 | 20 | .5 Hi-Collar Lock Washer |
| 32 | 130261 | 4 | .625 Lock Washer H C |
| 33 | 100121 | 16 | .5 Lock Washer Medium |
| 34 | 140853 | 2 | FITT2L-20H20M000-0000001 |
| 35 | 140899 | 1 | Blanking Cover |
| 36 | 100646 | 1 | FITT2P-02P000000-000S007 |
| 37 | 140901 | 1 | -241 O-Ring |

# PARTS LIST

CLAMP MANIFOLD ASSEMBLY 810449

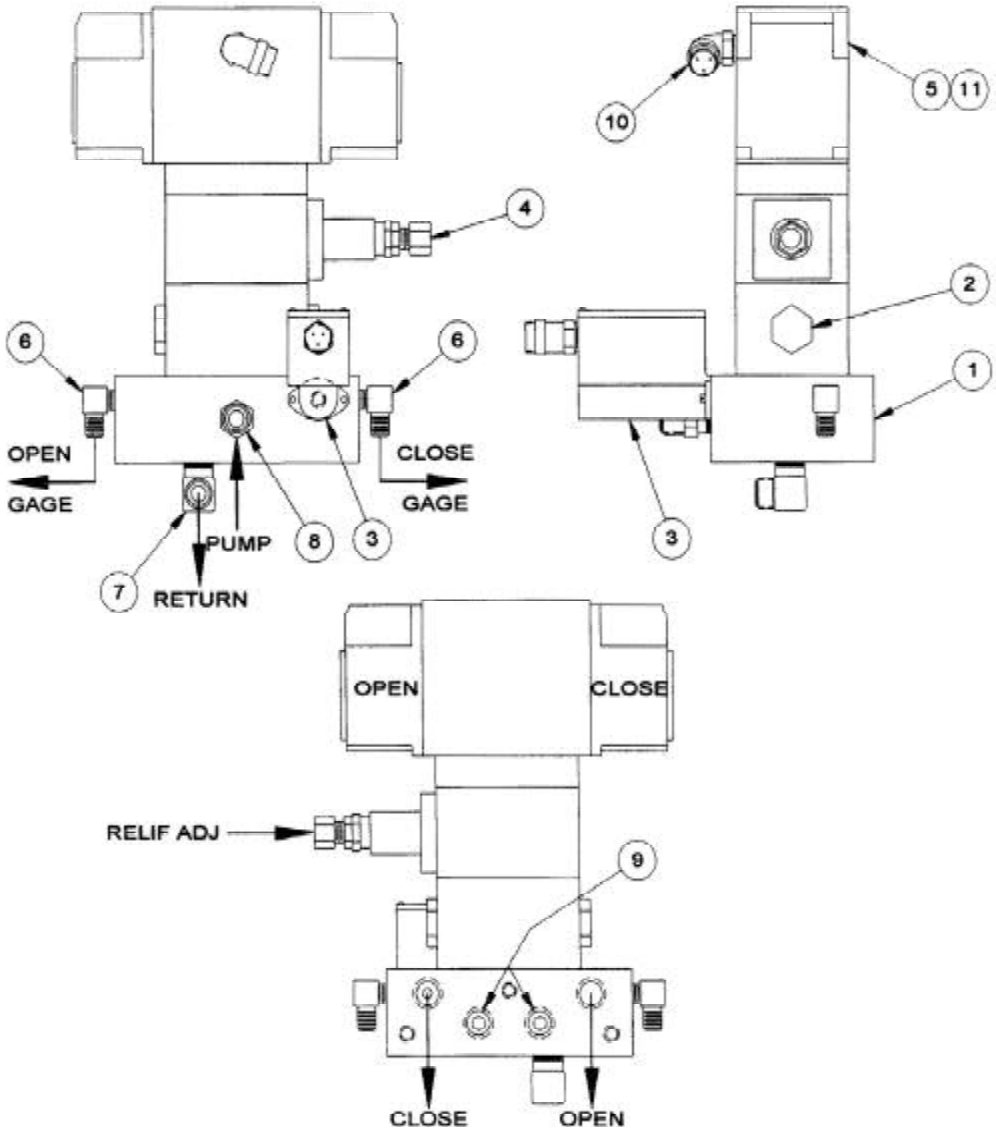

# PARTS LIST

CLAMP MANIFOLD ASSEMBLY 810449

| Item | Part Number | Qty. | Description |
|---|---|---|---|
| 1 | 110642 | 1 | Manifold Block |
| 2 | 110149 | 1 | Check Valve (CV-5) |
| 3 | 810425 | 1 | Pressure Switch (PS-1) |
| 4 | 100898 | 1 | Relief Valve (RV2) |
| 5 | 110147 | 1 | Control Valve (V-1) |
| 6 | 140539 | 2 | FITT2L-04M02P000-0000001 |
| 7 | 110632 | 1 | FITT2L-12M06P000-000H001 |
| 8 | 110630 | 1 | FITT2S-08M06P000-000H001 |
| 9 | 400213 | 2 | FITT2P-06P000000-000S007 |
| 10 | 110235 | 1 | 90° S/O Cord Adapter |
| 11 | 110634 | 4 | .25 - 20 UNC x 7.50 Lg SHCS |

# PARTS LIST

196 CLAMP ASSEMBLY (OPTIONAL) 800315

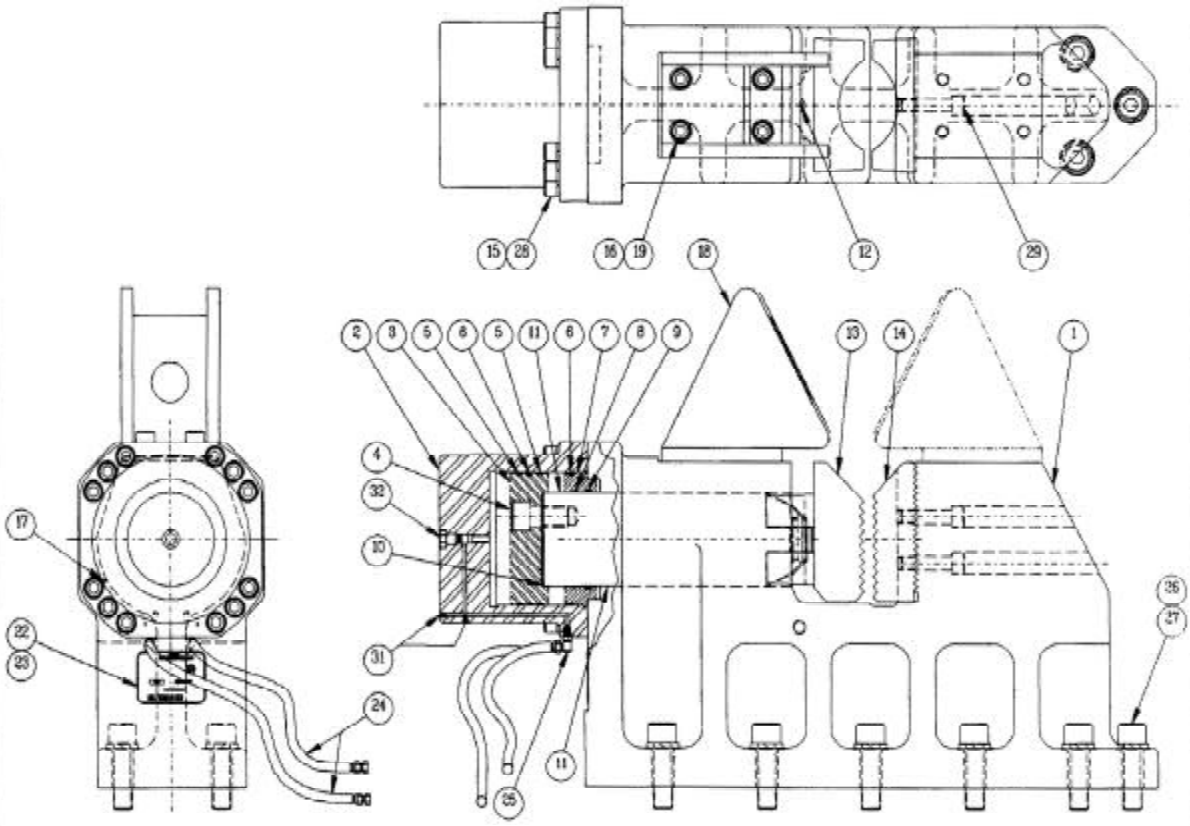

MODEL 44-65
VIBRATORY
DRIVER/EXTRACTOR

# PARTS LIST

196 CLAMP ASSEMBLY (OPTIONAL) 800315

| Item | Part Number | Qty. | Description |
|---|---|---|---|
| 1 | 810457 | 1 | 196 Clamp Casting Assembly |
| 2 | 810459 | 1 | 196 Cylinder |
| 3 | 120537 | 1 | 196 Piston |
| 4 | 120157 | 3 | 1.5-6 X 3.00 Lg SHCS |
| 5 | 120551 | 2 | Piston Bearing (Note) |
| 6 | 120549 | 2 | Seal (Note) |
| 7 | 120539 | 1 | 196 Rod End Cap |
| 8 | 120555 | 1 | Rod Bearing (Note) |
| 9 | 120553 | 1 | Rod Seal (Note) |
| 10 | 120347 | 1 | 2-261 O-Ring 90 Duro (Note) |
| 11 | 120535 | 1 | 196 Cylinder Rod |
| 12 | 130449 | 1 | Roll Pin .75 X 3.00 |
| 13 | 810461 | 1 | 196 Moveable Jaw |
| 14 | 810463 | 1 | 196 Fixed Jaw |
| 15 | 140145 | 1 | 21.0-8 X 3.5 Lg SHCS |
| 16 | 100209 | 4 | 1.00 Lock Washer Medium |
| 17 | 100229 | 1 | Grease Fitting |
| 18 | 100983 | 1 | Pile Feed Guide |
| 19 | 100213 | 4 | 1.0-8 X 2.5 Lg SHCS Locwel |
| 22 | 120561 | 1 | 196 S/N Plate |
| 23 | 130381 | 4 | Rivet |
| 24 | 120193 | 2 | HOSE038R02J006J006L132OS |
| 25 | 130057 | 2 | FITT2L-06M06R000-000H001 |
| 26 | 100193 | 11 | 1.5-6 X 5.0 Lg SHCS |
| 27 | 100195 | 11 | 1.5 Lock Washer Extra Heavy |
| 28 | 400787 | 12 | 1" H. C. Lock Washer |
| 29 | 100212 | 2 | 1.0-8 X 4 LG SHCS Locwel |
| 30 | 810473 | 1 | 196 Seal Kit |
| 31 | 100646 | 4 | FITT2P-02P000000-000S007 |
| 32 | 120629 | 1 | Holding Valve Cartridge (CV7) |

Note: Included in 196 Seal Kit

# PARTS LIST

CLAMP EXTENSION - 10 FOOT (OPTIONAL) 800423

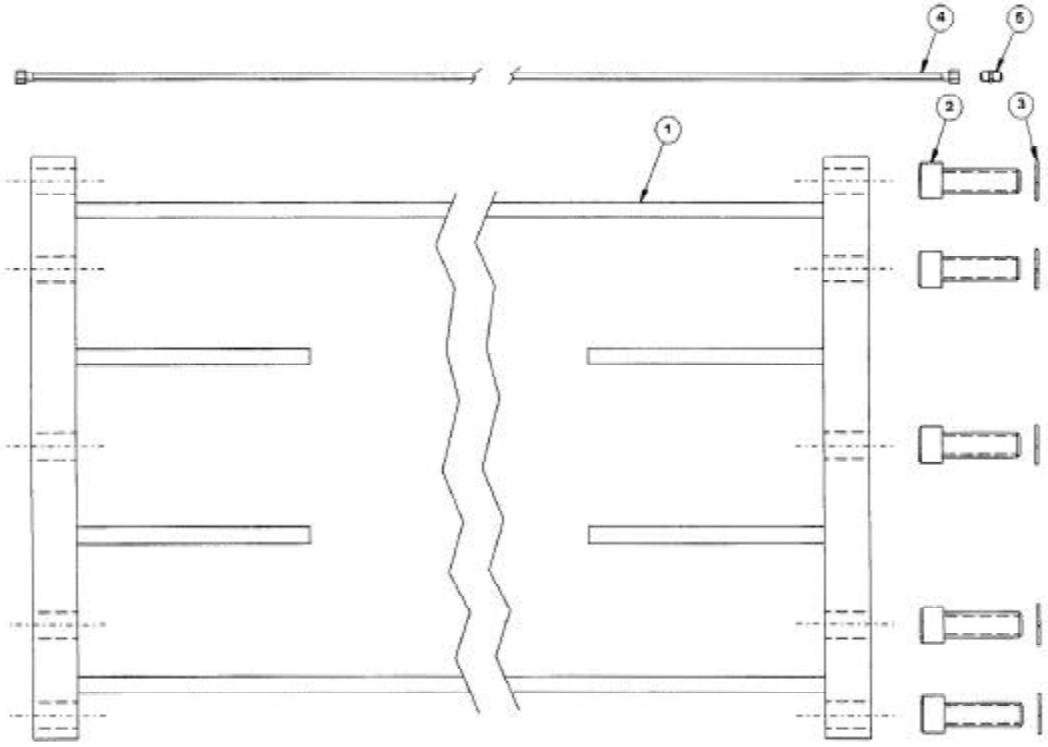


| Item | Part Number | Qty. | Description |
|---|---|---|---|
| 1 | 810655 | 1 | 10' Extension |
| 2 | 100193 | 10 | 1.50-6UNC x 5.00 Lg SHCS |
| 3 | 100195 | 10 | 1.50 Lock Washer |
| 4 | 120193 | 2 | HOSE038R02J006J006L1320S |
| 5 | 120081 | 2 | FITT2S-06M06M000-000H001 |

MODEL 44-65
VIBRATORY
DRIVER/EXTRACTOR

# PARTS LIST

90 Deg. CLAMP ADAPTER (OPTIONAL) 800049

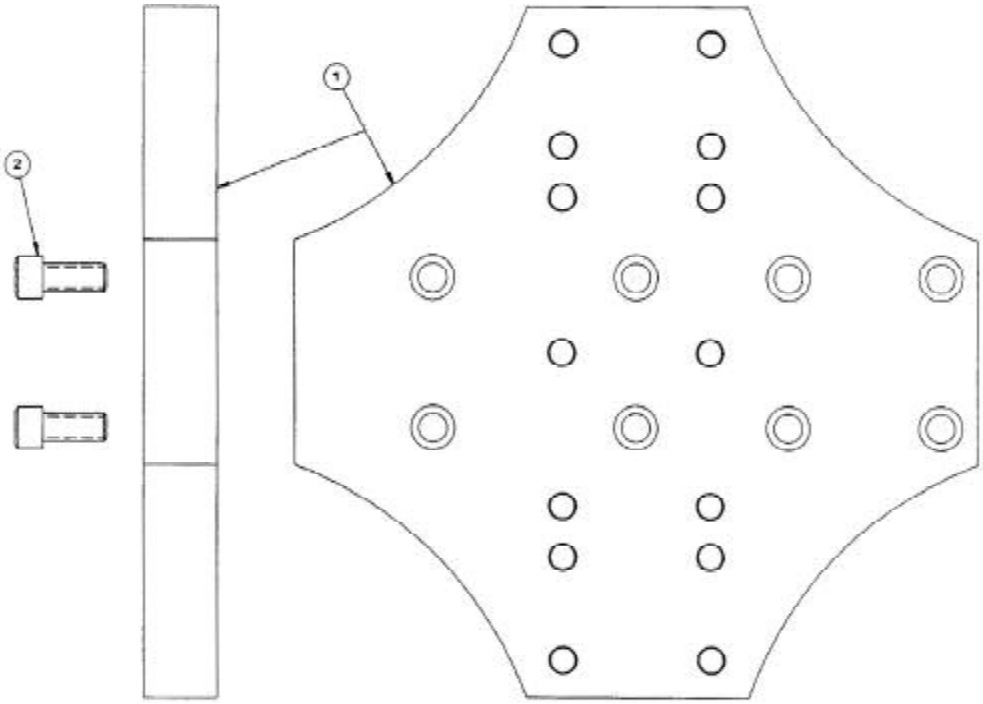


| Item | Part Number | Qty. | Description |
|---|---|---|---|
| 1 | 120083 | 1 | 90 deg. Clamp Adapter |
| 2 | 120077 | 8 | 1.50-6UNC x 3.50 Lg SHCS |

MODEL 44-65
VIBRATORY
DRIVER/EXTRACTOR

# PARTS LIST

CAISSON BEAM - 7 FOOT (OPTIONAL) 800477

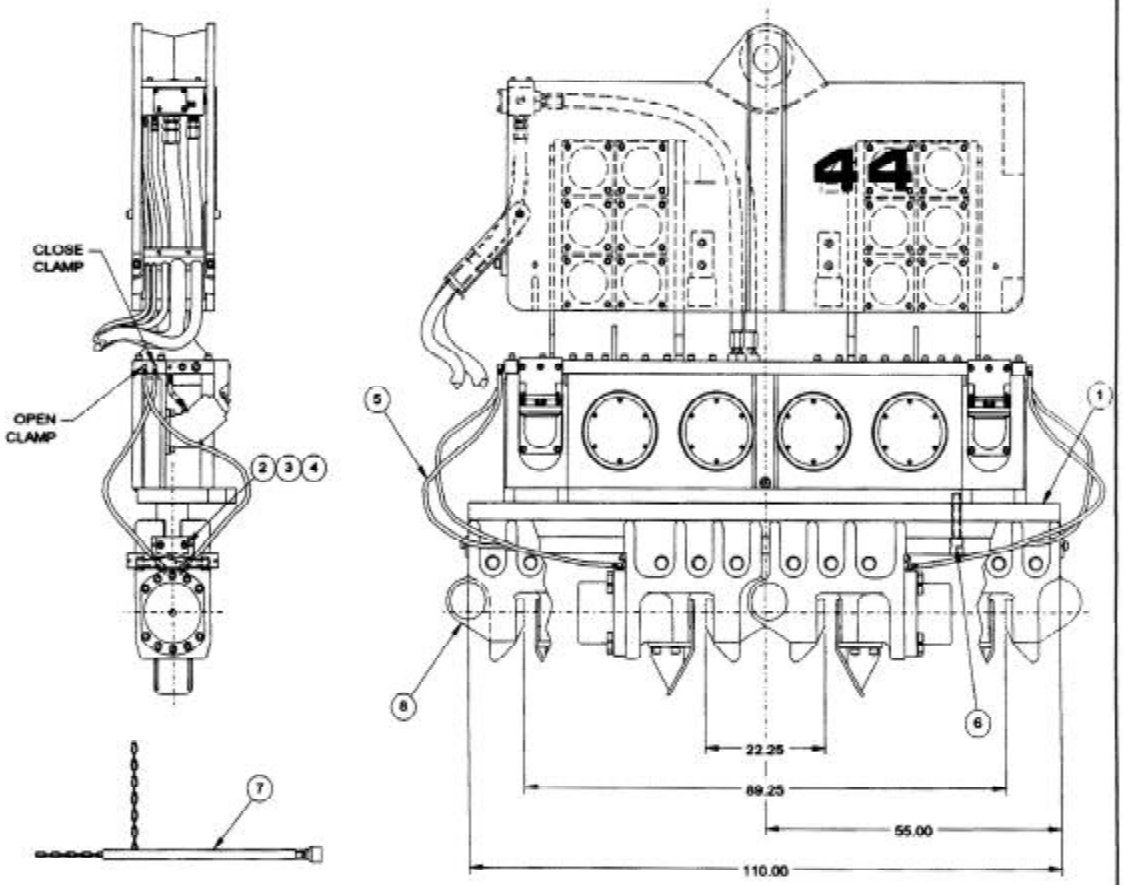


| Item | Part Number | Qty. | Description |
|---|---|---|---|
| 1 | 120001 | 1 | 7' Caisson Beam |
| 2 | 120011 | 2 | Clamp Stop |
| 3 | 400069 | 4 | .75-10UNC x 2.00 Lg SHCS |
| 4 | 100069 | 4 | .75 Lock Washer |
| 5 | 100228 | 4 | HOSE038R02J006J006L0610S |
| 6 | 120007 | 15 | 1.50-6UNC x 8.00 Lg SHCS |
| 7 | 810173 | 1 | Adjustment Tool |
| 8 | 800409 | 2 | #122 Caisson Clamp Asm. (Note) |
| 11 | 100230 | 4 | FITT2P-06M000000-000T001 |

Note: Not part of Caisson Beam Asm.

MODEL 44-65
VIBRATORY
DRIVER/EXTRACTOR

# PARTS LIST

CAISSON BEAM - 11 FOOT (OPTIONAL) 800479

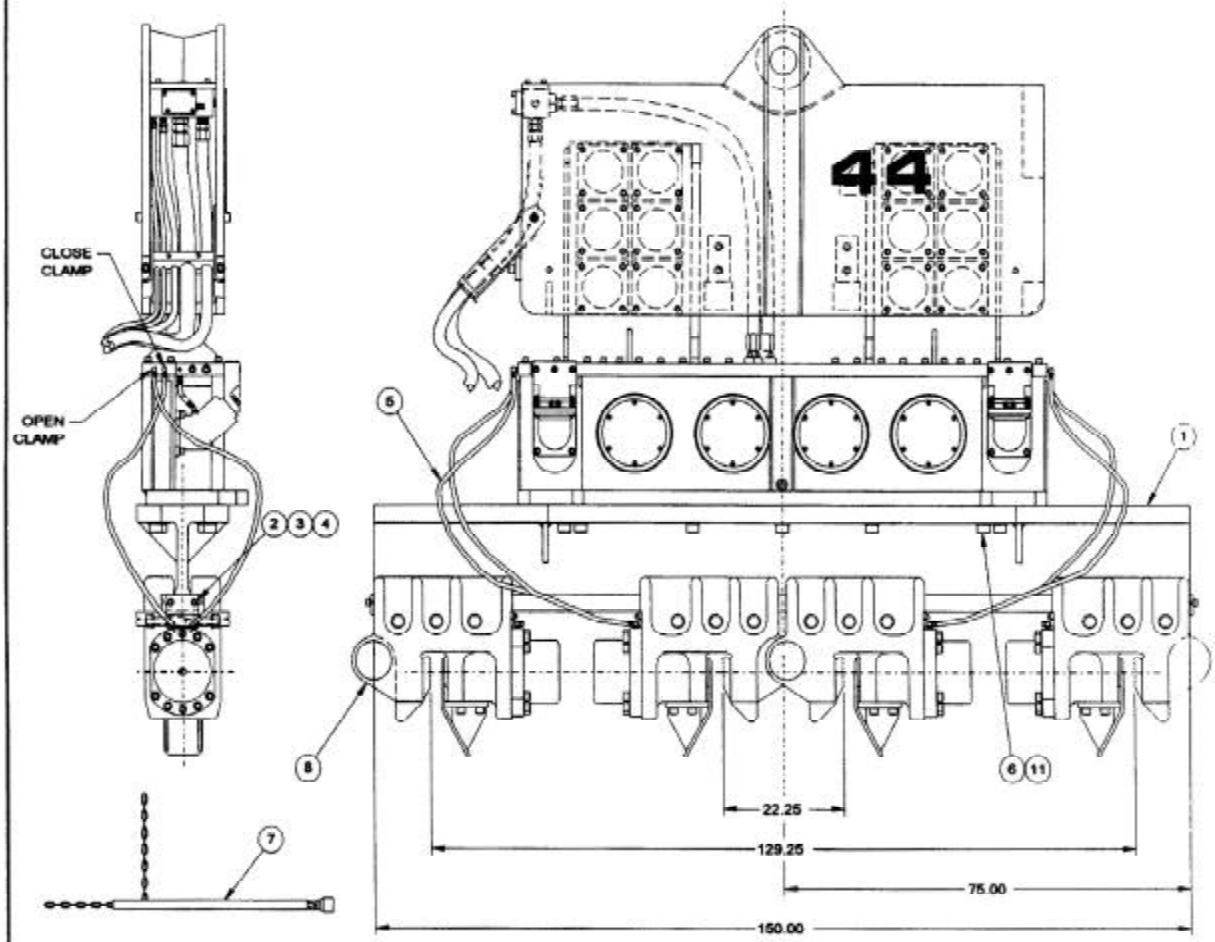


| Item | Part Number | Qty. | Description |
|---|---|---|---|
| 1 | 810251 | 1 | 11' Caisson Beam |
| 2 | 120011 | 2 | Clamp Stop |
| 3 | 400069 | 4 | .75-10UNC x 2.00 Lg SHCS |
| 4 | 100069 | 1 | .75 Lock Washer |
| 5 | 120009 | 4 | HOSE038R02J006J006L0960S |
| 6 | 100193 | 14 | 1.50-6UNC x 5.00 Lg SHCS |
| 7 | 810173 | 1 | Adjustment Tool |
| 8 | 800409 | 2 | #122 Caisson Clamp Asm. (Note) |
| 11 | 130219 | 14 | 1.50 Lock Washer Hi-Collar |
| 12 | 100230 | 4 | FITT2P-06M000000-000T001 |

Note: Not part of Caisson Beam Asm.

# PARTS LIST

MODEL 122 CAISSON CLAMP (OPTIONAL) 800409

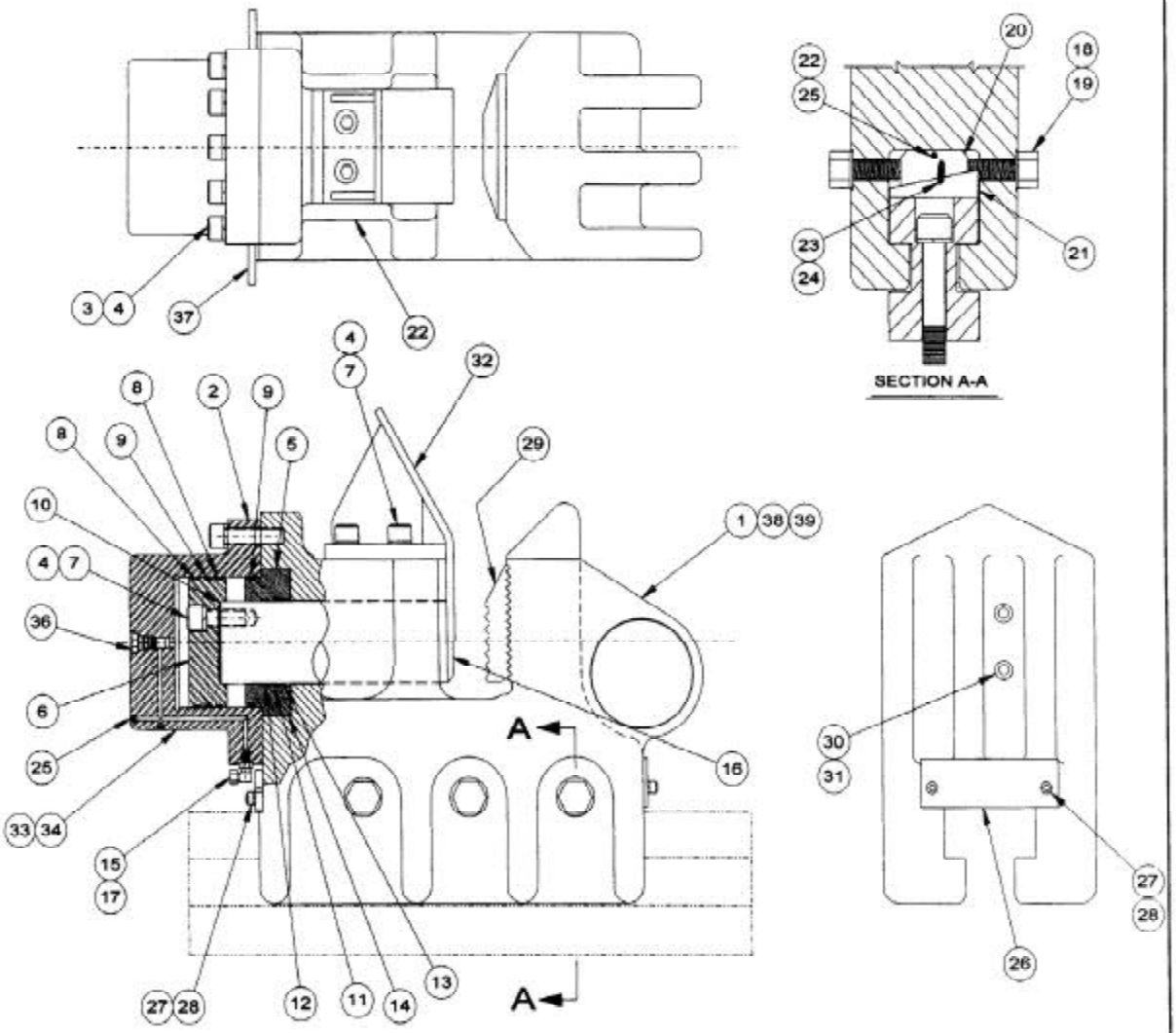

# PARTS LIST

MODEL 122 CAISSON CLAMP (OPTIONAL) 800409

| Item | Number | Qty. | Description |
|---|---|---|---|
| 1 | 810183 | 1 | 122 Clamp Body |
| 2 | 810491 | 1 | 126 Cylinder |
| 3 | 100212 | 10 | 1.0-8 X 4 Lg SHCS Locwel |
| 4 | 100209 | 17 | 1.0 Lockwasher Medium |
| 5 | 120633 | 1 | Rod End Cap |
| 6 | 120635 | 1 | Piston |
| 7 | 100213 | 7 | 1.0-8 X 2.5 Lg SHCS Locwel |
| 8 | 120285 | 2 | Piston Bearing (Note) |
| 9 | 120283 | 2 | Piston Seal (Note) |
| 10 | 120683 | 1 | 248-O-Ring (Note) |
| 11 | 120685 | 1 | Rod Seal (Note) |
| 12 | 120687 | 1 | Rod Bearing (Note) |
| 13 | 120289 | 1 | Rod Wiper (Note) |
| 14 | 120401 | 1 | 2-269 O-Ring 90 Duro (Note) |
| 15 | 130057 | 2 | FITT2L-06M06R000-000H001 |
| 16 | 120637 | 1 | Cylinder Rod |
| 17 | 100057 | 2 | FITT2C-06J000000-000H001 |
| 18 | 810109 | 3 | Caission 80 Screw Asm |
| 19 | 120111 | 6 | 1.25 H. S. Flat Washer |
| 20 | 120101 | 3 | Wedge |
| 21 | 120103 | 3 | Lock |
| 22 | 100229 | 4 | Grease Fitting |
| 23 | 120113 | 12 | .25 X 1.00 Type G Drive Pin |
| 24 | 120115 | 6 | Spring |
| 25 | 100646 | 7 | FITT2P-02P000000-000S007 |
| 26 | 120119 | 1 | Wedge Guard |
| 27 | 100119 | 4 | .5-13 X 1.25 Lg SHCS Locwel |
| 28 | 100121 | 4 | .5 Lock Washer Medium |
| 29 | 120261 | 1 | Fixed Jaw |
| 30 | 100773 | 2 | .625-11 X 4.5 Lg SHCS |
| 31 | 100007 | 2 | .625 Lock Washer Medium |
| 32 | 120259 | 1 | Caisson Head Guide |
| 33 | 120335 | 1 | 122 S/N Plate |
| 34 | 130381 | 4 | Rivet |
| 35 | 810633 | 1 | 122 Seal Kit |
| 36 | 120629 | 1 | Holding Valve Cartridge |
| 37 | 120689 | 1 | Chain Anchor |

Note: Included in Model 80 Seal Kit.

MODEL 44-65
VIBRATORY
DRIVER/EXTRACTOR

# PARTS LIST

PENDANT EXTENSION CABLE - 50' (OPTIONAL) 800059

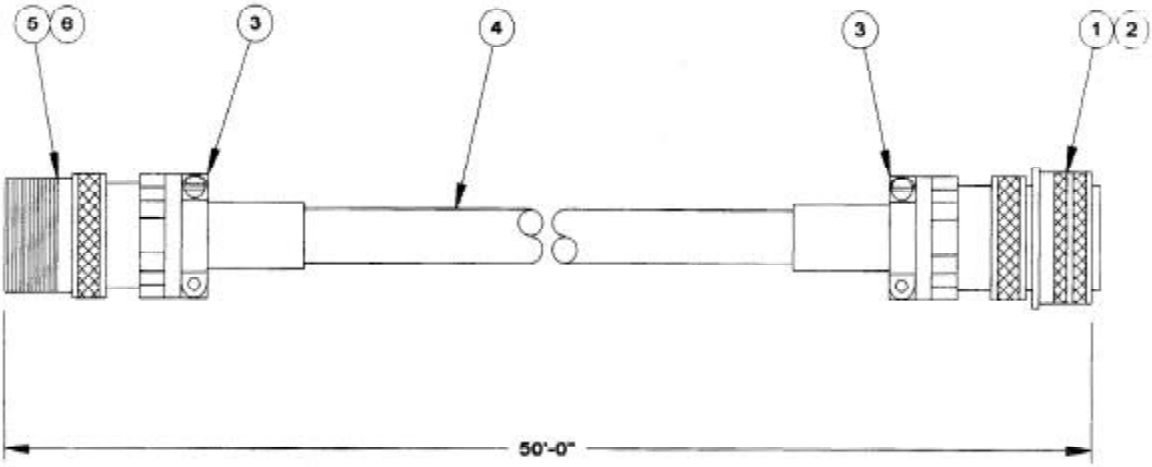


| Item | Part Number | Qty. | Description |
|---|---|---|---|
| 1 | 120169 | 1 | Amphenol Cable Jack |
| 2 | 110763 | 1 | Female Amphenol Insert |
| 3 | 100375 | 2 | Strain Relief - Amphenol |
| 4 | 100560 | 50 | Pendant Cable / Ft |
| 5 | 100395 | 1 | Amphenol Plug |
| 6 | 110761 | 1 | Male Amphenol Insert-Plug |

VIII.ORDERING PARTS

E. MISCELLANEOUS ACCESSORIES

1. TOOLS

| Part Number | Qty. | Description |
|---|---|---|
| 100651 | 1 | 24-Volt Test Light |
| 810045 | 1 | Set of Allen Wrenches - Includes All Wrenches Shown Below: |
| 100655 | | (1) 1/16" Allen Wrench - Long Arm |
| 100691 | | (1) 5/64" Allen Wrench - Long Arm |
| 100659 | | (1) 3/32" Allen Wrench - Long Arm |
| 100661 | | (1) 7/64" Allen Wrench - Long Arm |
| 100663 | | (1) 1/ 8" Allen Wrench - Long Arm |
| 100665 | | (1) 9/64" Allen Wrench - Long Arm |
| 100667 | | (1) 5/32" Allen Wrench - Long Arm |
| 100669 | | (1) 3/16" Allen Wrench - Long Arm |
| 100671 | | (1) 7/32" Allen Wrench - Long Arm |
| 100673 | | (1) 1/ 4" Allen Wrench - Long Arm |
| 100657 | | (1) 5/16" Allen Wrench - Long Arm |
| 100675 | | (1) 3/ 8" Allen Wrench - Long Arm |
| 100677 | | (1) 7/16" Allen Wrench - Long Arm |
| 100679 | | (1) 9/16" Allen Wrench - Long Arm |
| 100683 | | (1) 5/ 8" Allen Wrench - Long Arm |
| 100685 | | (1) 3/ 4" Allen Wrench - Long Arm |
| 100687 | | (1) 7/ 8" Allen Wrench - Short Arm |
| 100689 | | (1) 1" Allen Wrench - Short Arm |

2. BULK

| Part Number | Qty. | Description |
|---|---|---|
| 810013 | 5 GAL | Hydraulic Oil |
| 810011 | 5 GAL | Vibration Case Lubricant |
| 100726 | 1 GAL | Coolant/Anti-Freeze |
| 100298 | 1 GAL | J&M Green Paint |
| 100299 | 1 GAL | Primer |

VIII. ORDERING PARTS

E. MISCELLANEOUS ACCESSORIES (Continued)

3. 44 HOSE GROUP KIT-INTERNAL 850127

| Item | P/N | Qty. | Description | Page Ref. |
|---|---|---|---|---|
| 15 | 140907 | 2 | HOSE150PT6F024F024L0835C | VIII-6 |
| 23 | 100486 | 2 | HOSE050R01J008J008L01450 | VIII-6 |
| 27 | 140905 | 2 | HOSE038R02J006J006L0835C | VIII-6 |
| 32 | 140903 | 1 | HOSE075PT4F012FO12L0835C | VIII-6 |

4. 650 HOSE GROUP KIT-INTERNAL 850143

| Item | P/N | Qty. | Description | Page Ref. |
|---|---|---|---|---|
| 9 | 140753 | 1 | HOSE200R01J032J032L17200 | VIII-28 |
| 10 | 140755 | 1 | HOSE200R01J032J032L18300 | VIII-28 |
| 11 | 130393 | 1 | HOSE019AQ1J004J004L11000 | VIII-28 |
| 12 | 140735 | 2 | HOSE025R02J004J004L11700 | VIII-28 |
| 33 | 140867 | 1 | HOSE125PT6H920J020L03500 | VIII-29 |
| 34 | 140865 | 1 | HOSE125PT6H920J020L02500 | VIII-29 |
| 35 | 140863 | 1 | HOSE125PT6H920H020L06400 | VIII-29 |
| 36 | 140861 | 1 | HOSE125PT6H920H020L05600 | VIII-29 |
| 44 | 400215 | 1 | HOSE100R01P016P016L08400 | VIII-29 |
| 48 | 300193 | 1 | HOSE075R01J012J012L02350 | VIII-29 |
| 61 | 140845 | 1 | HOSE200R01J032J032L13900 | VIII-29 |
| 62 | 140849 | 1 | HOSE200R01J032J032L15000 | VIII-29 |
| 67 | 140729 | 1 | HOSE200R01J032F032L09000 | VIII-30 |
| 68 | 140727 | 1 | HOSE200RO1J032J032L09900 | VIII-30 |
| 69 | 140723 | 1 | HOSE150RO1J024F024L04800 | VIII-30 |
| 70 | 140725 | 1 | HOSE150R01J024F024L08700 | VIII-30 |
| 94 | 140919 | 1 | HOSE100R01J016J016L03600 | VIII-30 |
| 136 | 140875 | 1 | HOSE100R01P016J016L04400 | VIII-31 |
| 138 | 110470 | 1 | HOSE050PT4J008J008L03500 | VIII-31 |
| 162 | 100486 | 2 | HOSE050R01J008J008L01450 | VIII-32 |
| 163 | 140741 | 1 | HOSE050R01J008J008L03800 | VIII-32 |
| 164 | 140743 | 1 | HOSE050RO1J008J008L07000 | VIII-32 |
| 167 | 110633 | 1 | HOSE038R02J006J006L0370S | VIII-32 |
| 178 | 140747 | 1 | HOSE075R01J012J012L08800 | VIII-32 |
| 189 | 110680 | 1 | HOSE019AQ1J004J004L40000 | VIII-33 |

VIII. ORDERING PARTS

E. MISCELLANEOUS ACCESSORIES (CONTINUED)

5. 44-65 / 650 O-RING KIT 850145

| P/N | Qty. | Description |
|---|---|---|
| 100097 | 1 | #214-O-Ring |
| 100037 | 16 | #222-O-Ring |
| 110119 | 9 | #225-O-Ring |
| 140233 | 5 | #228-O-Ring |
| 400379 | 4 | #232-O-Ring |
| 140901 | 1 | #241-O-Ring |

6. CYLINDER SEAL KITS

MODEL 196 CLAMP CYLINDER 800315 Refer to page VIII-40

| Item | P/N | Qty. | Description |
|---|---|---|---|
| 5 | 120551 | 2 | Piston Bearing |
| 6 | 120549 | 2 | Piston Seal |
| 8 | 120555 | 1 | Rod Bearing |
| 9 | 120553 | 1 | Rod Seal |
| 10 | 120347 | 1 | #261-O-Ring |

MODEL 122 CLAMP CYLINDER 800409 Refer to page VIII-46

| Item | P/N | Qty. | Description |
|---|---|---|---|
| 8 | 120285 | 2 | Piston Bearing |
| 9 | 120283 | 2 | Piston Seal |
| 10 | 120683 | 1 | #248-O-Ring |
| 11 | 120685 | 1 | Rod Seal |
| 12 | 120687 | 1 | Rod Bearing |
| 13 | 120289 | 1 | Rod Wiper |
| 14 | 120401 | 1 | #269-O-Ring |

VIII. ORDERING PARTS

E. MISCELLANEOUS ACCESSORIES (CONTINUED)

5. 44-65 / 650 O-RING KIT 850145

| P/N | Qty. | Description |
|---|---|---|
| 100097 | 1 | #214-O-Ring |
| 100037 | 16 | #222-O-Ring |
| 110119 | 9 | #225-O-Ring |
| 140233 | 5 | #228-O-Ring |
| 400379 | 4 | #232-O-Ring |
| 140901 | 1 | #241-O-Ring |

6. CYLINDER SEAL KITS

MODEL 196 CLAMP CYLINDER 800315 Refer to page VIII-40

| Item | P/N | Qty. | Description |
|---|---|---|---|
| 5 | 120551 | 2 | Piston Bearing |
| 6 | 120549 | 2 | Piston Seal |
| 8 | 120555 | 1 | Rod Bearing |
| 9 | 120553 | 1 | Rod Seal |
| 10 | 120347 | 1 | #261-O-Ring |

MODEL 122 CLAMP CYLINDER 800409 Refer to page VIII-46

| Item | P/N | Qty. | Description |
|---|---|---|---|
| 8 | 120285 | 2 | Piston Bearing |
| 9 | 120283 | 2 | Piston Seal |
| 10 | 120683 | 1 | #248-O-Ring |
| 11 | 120685 | 1 | Rod Seal |
| 12 | 120687 | 1 | Rod Bearing |
| 13 | 120289 | 1 | Rod Wiper |
| 14 | 120401 | 1 | #269-O-Ring |

VIII. ORDERING PARTS

F. RECOMMENDED SPARE PARTS

VIBRATION SUPPRESSOR 800487 Refer to page VIII-6

| Item | P/N | Qty. | Description |
|---|---|---|---|
| 41 | 100796 | 2 | Elastomer |
| 30 | 110119 | 4 | #225 O-Ring |
| 34 | 100097 | 1 | #214 O-Ring |
| 48 | 100037 | 4 | #222 O-Ring |

VIBRATION CASE 810649 Refer to page VIII-10

| Item | P/N | Qty. | Description |
|---|---|---|---|
| 6 | 100187 | 2 | FITT2P-12P000000-000S0M7 |
| 15 | 100185 | 1 | Sight Gage |

HOSE ASSEMBLIES-INTERCONNECTING 800433 Refer to page VIII-16

| Item | P/N | Qty. | Description |
|---|---|---|---|
| 4 | 140923 | 1 | HOSE150PT6J024J024L60000 |
| 9 | 110970 | 1 | HOSE200R09J032J032L60000 |
| 13 | 100241 | 1 | HOSE075R02P012P012L62000 |
| 17 | 100247 | 2 | HOSE038RO2P006P006L62000 |

POWER UNIT - INTERNAL 800431 Refer to page VIII-26

| Item | P/N | Qty | Description |
|---|---|---|---|
| 24 | 100037 | 8 | #222-O-Ring |
| 25 | 110119 | 2 | #225-O-Ring |
| 51 | 140403 | 4 | Filter Element |
| 33 | 140867 | 1 | HOSE125PT6H920J020L03500 |
| 34 | 140865 | 1 | HOSE125PT6H920J020L02500 |
| 35 | 140863 | 1 | HOSE125PT6H920H020L06400 |
| 36 | 140861 | 1 | HOSE125PT6H920H020L05600 |
| 138 | 110470 | 1 | HOSE050PT4J008J008L03500 |
| --- | 140549 | 2 | Air Cleaner Element |

VIII. ORDERING PARTS

F. RECOMMENDED SPARE PARTS (CONTINUED)

TERMINAL MANIFOLD 810709 Refer to page VIII-12

| Item | P/N | Qty | Description |
|---|---|---|---|
| 5 | 100032 | 1 | Relief Valve |
| 13 | 110119 | 2 | #225 O-Ring |
| 16 | 100097 | 1 | #214 O-Ring |
| 21 | 140255 | 2 | #113 O-Ring |

MODEL 196 CLAMP 800315 Refer to page VIII-40

| Item | P/N | Qty. | Description |
|---|---|---|---|
| 12 | 130449 | 1 | Spiral Roll Pin |
| 13 | 810461 | 1 | Movable Jaw |
| 14 | 810463 | 1 | Fixed Jaw |
| 24 | 120193 | 2 | HOSE038R02J006J006L1320S |
| 25 | 130057 | 1 | FITT2L-06M06R000-0000001 |
| 26 | 100193 | 11 | 1.5-6UNC x 5.00 Lg SHCS |
| 27 | 100195 | 11 | 1.5 Lock Washer |
| 28 | 400787 | 2 | 1.00 H.C. Lock Washer |
| 29 | 100212 | 2 | 1.0-8 X 4.00 Lg. SHCS Locwel |
| 30 | 810473 | 1 | 196 Seal Kit |
| 32 | 120629 | 1 | Holding Valve |

MODEL 122 CAISSON CLAMP 800409 Refer to page VIII-46

| Item | P/N | Qty | Description |
|---|---|---|---|
| 15 | 130057 | 2 | FITT2L-06M06R000-000H001 |
| 18 | 810109 | 1 | Screw Assembly |
| 29 | 120261 | 1 | Fixed Jaw |
| 30 | 100773 | 2 | .625-11UNC x 4.50 Lg SHCS |
| 35 | 810633 | 1 | Model 122 Seal Kit |
| 36 | 120629 | 1 | Holding Valve |

G. RECOMMENDED TIGHTENING TORQUE

| Nominal Screw Size | Nominal Socket Size | Tightening Torque Ft-Lbs. (Kg-M) | Nominal Screw Size | Nominal Socket Size | Tightening Torque Ft-Lbs. (Kg-M) |
|---|---|---|---|---|---|
| #10-24 | 5/32 | 6 Ft-Lbs. (.83 Kg-M) | #10-32 | 5/32 | 6 Ft-Lbs. (.83 Kg-M) |
| 1/4-20 | 3/16 | 13 Ft-Lbs. (1.8 Kg-M) | 1/4-28 | 3/16 | 15 Ft-Lbs. (2.1 Kg-M) |
| 5/16-18 | 1/4 | 27 Ft-Lbs. (3.7 Kg-M) | 5/16-24 | 1/4 | 30 Ft-Lbs. (4.2 Kg-M) |
| 3/8-16 | 5/16 | 48 Ft-Lbs. (6.6 Kg-M) | 3/8-24 | 5/16 | 55 Ft-Lbs. (7.6 Kg-M) |
| 7/16-14 | 3/8 | 77 Ft-Lbs. (10.6 Kg-M) | 7/16-20 | 3/8 | 86 Ft-Lbs. (11.9 Kg-M) |
| 1/2-13 | 3/8 | 119 Ft-Lbs. (16.4 Kg-M) | 1/2-20 | 3/8 | 133 Ft-Lbs. (18.4 Kg-M) |
| 5/8-11 | 1/2 | 234 Ft-Lbs. (32.3 Kg-M) | 5/8-18 | 1/2 | 267 Ft-Lbs. (36.9 Kg-M) |
| 3/4-10 | 5/8 | 417 Ft-Lbs. (57.6 Kg-M) | 3/4-16 | 5/8 | 467 Ft-Lbs. (64.5 Kg-M) |
| 7/8-9 | 3/4 | 676 Ft-Lbs. (93.4 Kg-M) | 7/8-14 | 3/4 | 742 Ft-Lbs. (102.5 Kg-M) |
| 1-8 | 3/4 | 1,009 Ft-Lbs. (139.4 Kg-M) | 1-12 | 3/4 | 1,126 Ft-Lbs. (155.6 Kg-M) |
| 1-1/4-7 | 7/8 | 1,600 Ft-Lbs. (221.1 Kg-M) | 1-1/4-12 | 7/8 | 1,800 Ft-Lbs. (248.8 Kg-M) |
| 1-1/2-6 | 1 | 2,800 Ft-Lbs. (387 Kg-M) | 1-1/2-12 | 1 | 3,000 Ft-Lbs. (414.6 Kg-M) |

NOTE: These values are for Socket head cap screws only. Button heads, Flat heads and Set screws have different values. Check the Allen Hand Book for correct torque specifications.