B & T DESIGN & ENGINEERING, INC.
P.O. Box 595 • Issaquah, WA 98027 • Phones: 425-557-0779 • Fax: 425-557-0765

STRUCTURAL PILING CALCULATIONS

FOR

ALDREDGE POWER LINE PROJECT
ALDREDGE, NEW JERSEY

PILING MANUFACTURER/SUPPLIER:

A.P.E. DEEP FOUNDATIONS

7032 SOUTH 196TH STREET
KENT, WASHINGTON 98032
[CONTACT: PAUL SUVER, (206) 403-8277-MOBILE]

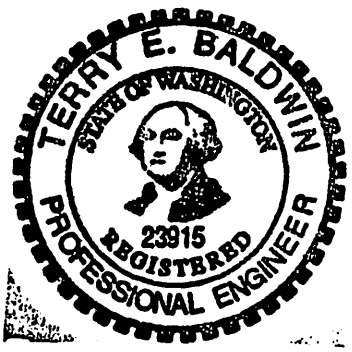

MAY 12, 2015 – SUBMITTAL
[B & T PROJECT NO. 15061]

DESIGN & B&T ENGINEERING
425-557-0779

PROJECT ALDRIDGE N.J. SHEET NO. SP-1 OF SP-3
DESCRIPTION POLE LINE TOWERS DES JT DATE 5/15
CHK ____ JOB NO. 15061

SELECT 7"Φ [.408" WALL]

PILE LENGTHS - ±105'

HELIX - 20"Φ [3/4" t]

HELIX AREA - 314.2 IN² [2.18 FT²]

7"Φ PILES [O.D. = 7.0" / I.D. = 6.184"]

F_y = 110 KSI

AREA = 8.45 IN²

S = 13.16 IN³

F_A = .5(110 KSI) = 55 KSI

F_Y = 8.45 IN² (55 KSI) = 465 K/PILE [232.5 TONS/PILE]

$P_{HELIX\ YIELD}$ (9/16" FILLET) = 7(π)0.75(2) = 296 K YIELD CAPACITY [184 TONS]

B&T DESIGN & ENGINEERING
425-557-0779

PROJECT ALDREGE N.J. SHEET NO. Sp.2 OF Sp.3
DESCRIPTION POWER LINE TOWERS DES J.T. DATE 5/15
CHK JOB NO. 15061

CHECK SINGLE HELIX FLIGHT:

$S_{FLIGHT} = \frac{(1).75^2}{6} = .094^{IN^3}$

$A_{FLIGHT} = 314.2^{IN^2}$

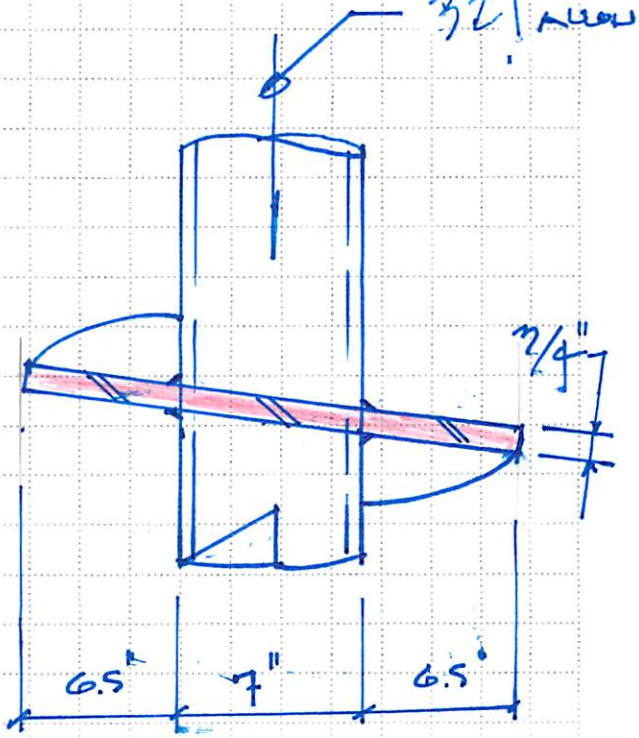

$W_{S\,ALLOW} = .240^{KSI}$

$M = \frac{.240^{KSI}(6.5^2)}{2} = 5.07^{K}$

$S_F = \frac{5.07^{KSI}}{55^{KSI}} = .093^{IN^3} < .094^{IN^3}$

$P_{FLT.} = .093^{KSI}(314.2^{IN^2}) = 29.2^{k}$

$P_{PROJECTED} = 7.0^{LSF}[107^{FT^2}]$

$P_{PROJECTED} = \frac{32.1^{k}\ ULT.}{[160.5^{TONS}]}\left(\frac{32.1^{K/PILE}\ ALLOW}{(TEST\ IN\ FIELD)}\right)$

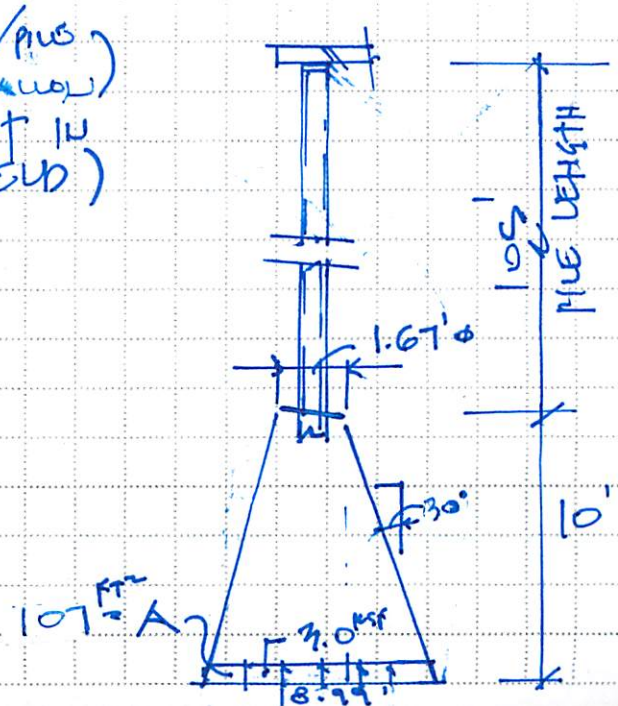

B&T DESIGN & ENGINEERING
425-557-0779

PROJECT ALDREDGE N.J. SHEET NO. Sp-3 OF Sp-3
DESCRIPTION POWER LINE TOWERS DES JT DATE 5/15
CHK JOB NO. 15061

CHECK UPLIFT:

105' EMBED (USE 80')

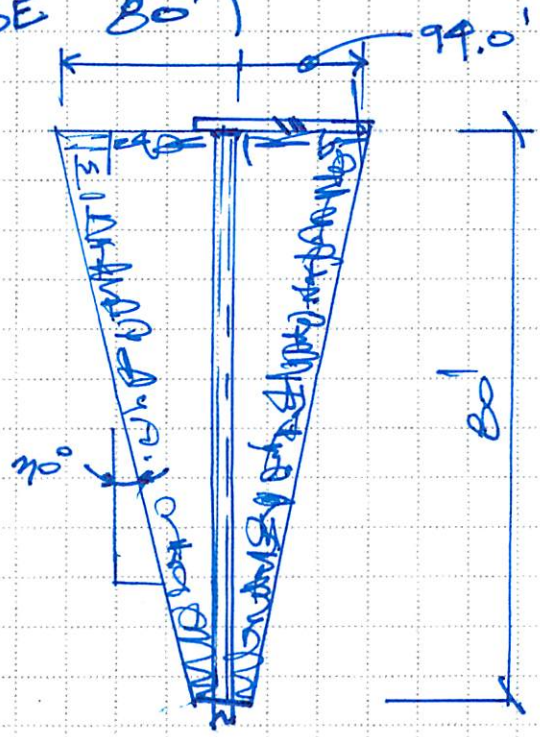

$A_{\text{AREA SOIL ANCHOR}} = \frac{.7854(94^2)}{2}(80')$

$P_{A_{\text{AREA ANCHOR}}} = 277{,}591^{ft^3}(.120^{kcf}) =$

$P_{\text{SOIL ANCHOR}} = \underline{33{,}311^K}$ SOIL CAPACITY

(12) 7"φ (.408") PILES

$P_{\text{CAPACITY}} = 12(321^k)$

$P_{\text{CAP}} = 3{,}852^k$

$P_{\text{UPLIFT}} = (3)\,29.22^k$

$P_{\text{UPLIFT}} = 87.66^k$
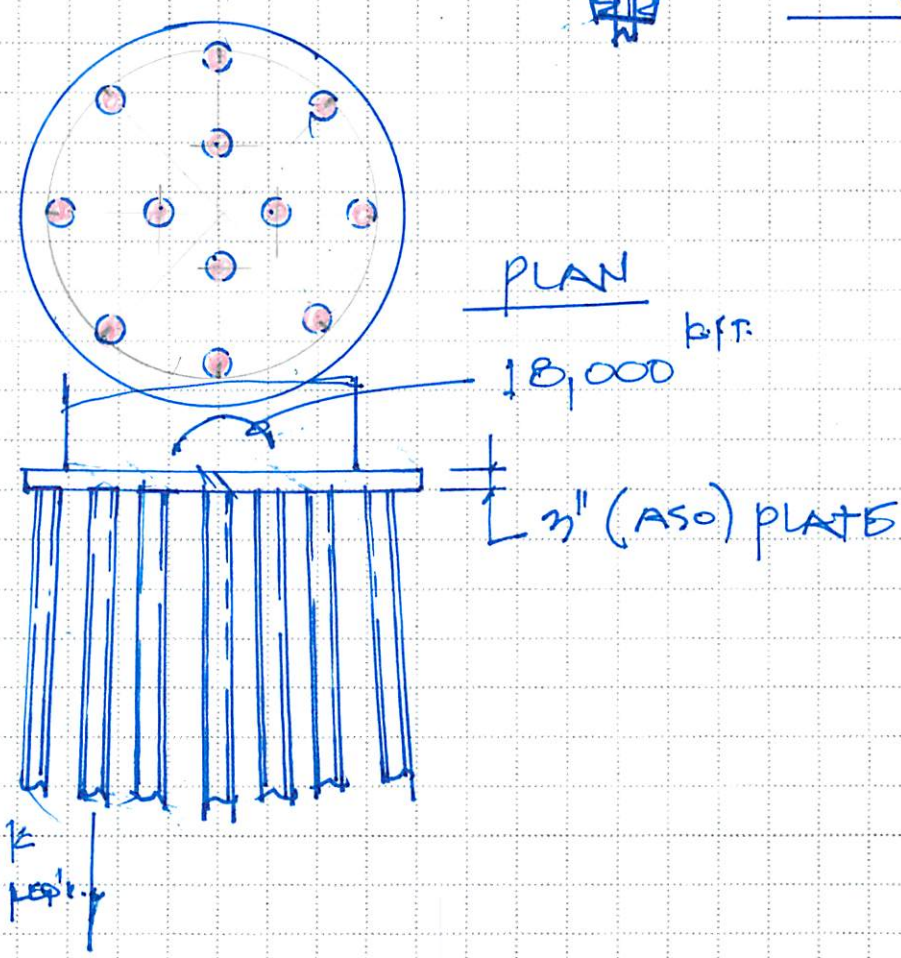
∴ (12) 7"φ (.408") HELICAL PILES O.K.