OPERATING AND MAINTENANCE MANUAL

ROBOVIBE

VIBRATORY PILE DRIVER/EXTRACTOR

AMERICAN PILEDRIVING EQUIPMENT, INC

MANUFACTURERS OF VIBRATORY PILEDRIVERS
AND RELATED DEEP FOUNDATION EQUIPMENT

KENT, WA 1-800-248-8498

www.apevibro.com

OM-ROBOVIBE-1215

Copyright © 2023 American Piledriving Equipment, Inc. All Rights Reserved

ROBOVIBE
VIBRATORY
DRIVER/EXTRACTOR

Copyright © 2023 American Piledriving Equipment, Inc. All Rights Reserved

ROBOVIBE MANUAL

ROBOVIBE SERIAL NUMBER AND SETTINGS PAGE
ROBOVIBE Serial Number _____
Configured for Excavator: Make - _____
Model - _____

Configuration:
Yoke Part Number – _____
Motor Size - _____
FORWARD Relief Pressure Setting – _____ PSI
REVERSE Relief Pressure Setting – 2700 PSI
Pressure Reducing Valve Pressure Setting – 2500 PSI
Sequence Valve Pressure Setting – 2200 PSI

Copyright © 2023 American Piledriving Equipment, Inc. All Rights Reserved

PREFACE

This manual was prepared to acquaint the owner, operator and serviceman with the operation and maintenance of the vibratory driver/extractor. We suggest that this manual be carefully studied before operating or undertaking any maintenance work on the unit.

This manual is organized into two major categories.

The first category is for routine OPERATING INSTRUCTIONS of the unit and includes a GENERAL DESCRIPTION section, which presents a basic explanation of the driver/extractor and some of its specifications. The MAINTENANCE AND ADJUSTMENT section should be referred to periodically for normal servicing of equipment. All machines and equipment require systematic, periodic inspection and maintenance, if they are to perform satisfactorily, over a long period of time. The driver/extractor is primarily a vibrating machine and if not given the best of care, or if improperly used and maintained, it is self-destructive. Therefore, the unit should receive at least the same care and maintenance as other high quality construction equipment.

The second category is for parts reordering and it includes both a PARTS LIST and a pictorial drawing of the assembly, for easier determination of the required part. Refer to the ORDERING PARTS section of the PARTS LIST for more specific procedures regarding parts ordering. Adherence of the listed procedures will insure receipt of the required part(s) with the minimal amount of delay or error.

Copyright © 2023 American Piledriving Equipment, Inc. All Rights Reserved

Warranty

American Piledriving Equipment, Inc. J&M Foundation Equipment LLC
STANDARD WARRANTY

American Piledriving Equipment, Inc./J&M Foundation Equipment LLC (APE/J&M) warrants new products sold by it to be free from defects in material or workmanship for a period of one year after the date of delivery to the first user and subject to the following conditions:
APE/J&M's obligation and liability under this WARRANTY is expressly limited to repairing or replacing at APE/J&M's option, any parts which appear to APE/J&M upon inspection to have been defective in material or workmanship. Such parts shall be provided at no cost to the user, at the business establishment of APE/J&M or the authorized APE/J&M distributor of the product during regular working hours. This WARRANTY, shall not apply to component parts or accessories of products not manufactured by APE/J&M and which carry the warranty of the manufacturer thereof, or to normal maintenance (scraped and scived lube and fuel lines, worn cushion material in the drive base) or normal maintenance parts (such as fouled injectors, weakened check valve springs, damaged grease zirts caused by use over time).
Replacement or repair parts installed in the product covered by this WARRANTY are warranted only for the remainder of the warranty as if such parts were original components of said product. APE/J&M makes no other warranty, expressed or implied and makes no warranty of merchantability of fitness for any particular purpose.

APE's obligation under this WARRANTY shall not include any transportation charges, costs of installation, duty, taxes or any other charges whatsoever, or any liability for direct, indirect, incidental or consequential damage or delay. If requested by APE/J&M, products or parts for which a warranty claim is made are to be returned transportation prepaid to APE/J&M. Any improper use, including operation after discovery of defective or worn parts, operation beyond rated capacity, substitution of any parts whatsoever, or parts not approved by APE/J&M or any alteration or repair by others in such manner as in APE/J&M's judgment affects the product materially and adversely, shall void this warranty.

ANY TYPE OF WELDING ON EQUIPMENT
WILL VOID THE WARRANTY

Refusal: Vibros: If the pile does not move one foot in 30 seconds of vibro operation at full speed. Resort to a larger vibro. APE/J&M equipment may exceed the refusal driving criteria for short periods of time as may be needed to penetrate hard soil layers or obstacles. In such cases, a heat gun is used to monitor the temperature of thebearings and related components to prevent use of the machine beyond 210 degrees. Contact APE/J&M or your local APE/J&M distributor for special instructions when faced with refusal conditions.
Refusal: Diesels: Do not exceed 10 blows per inch or 120 blows per foot. In cases of setting of the pile it is permitted to increase the blow count to 250 blows per foot, but only for one foot of driving penetration. Pile inspectors should consult the APE factory for permission to exceed these limits. Failure to do so will void the warranty. This standard specification is accepted by the DFI (Deep Foundations Institute) and the PDCA (Pile Contractors Association) and by all manufacturers of pile driving equipment.

Copyright © 2023 American Piledriving Equipment, Inc. All Rights Reserved

ROBOVIBE
VIBRATORY
DRIVER/EXTRACTOR

TABLE OF CONTENTS

OPERATING INSTRUCTIONS

I.	GENERAL DESCRIPTION	PAGE
	A. General	I-1
	B. Specifications	I-2
II.	PREPARATION FOR OPERATING	
	A. General	II-1
	B. Safety Precautions	II-1
	C. Rigging of Vibrator	II-3
	1. Excavator Preparation	II-3
	2. ROBOVIBE Installation	II-3
	3. Gage Hose	II-5
	4. Changing Excavators	II-5
III.	OPERATING INSTRUCTIONS	
	A. Completion of Set-Up and Maintenance	III-1
	B. Warming Hydraulic Oil	III-1
	C. Conventions of Operation	III-1
	D. Positioning the Pile and ROBOVIBE	III-2
	E. Driving Operations	III-2
	F. Extracting Operations	III-3
IV.	MAINTENANCE AND ADJUSTMENTS	
	A. General	IV-1
	B. Daily	IV-1
	C. 100 Hours	IV-2
	D. Severe Conditions	IV-2
	E. Lubrication	IV-3
	F. Capacities	IV-4
	G. Bolt Torque Information	IV-5

Copyright © 2023 American Piledriving Equipment, Inc. All Rights Reserved

TABLE OF CONTENTS

OPERATING INSTRUCTIONS (CONTINUED)

		PAGE
V.	PROCEEDURES AND ADJUSTMENTS	
	A. Conventions of Valves	V-1
	B. Manifold Adjustments	V-1
	C. Clamp Lubrication	V-3
	D. Swivel	V-3
VI.	HYDRAULIC CIRCUITRY	
	Hydraulic Schematic	VI-1
	A. Hydraulic Components List	VI-2

PARTS LIST

VII.	GENERAL DATA	
	A. Abbreviations	VII- 1
	B. Screws and Bolts	VII- 1
	C. Serial Number Locations	VII- 2
VIII.	ORDERING PARTS	
	A. Procedure	VIII- 1
	B. Fitting Description Key	VIII- 2
	Fitting Style Selector Chart - SC1	VIII- 3
	C. Hose Description Code	VIII- 4
	D. Parts Identification	VIII- 5
	Parts Lists and Drawings	VIII- 6
	E. Miscellaneous Accessories	VIII-15
	F. Recommended Spare Parts	VIII-17
	G. Recommended Tightening Torque	VIII-18
	H. ROBOVIBE Excavator Application Form	VIII-20

Copyright © 2023 American Piledriving Equipment, Inc. All Rights Reserved

ROBOVIBE
VIBRATORY
DRIVER/EXTRACTOR

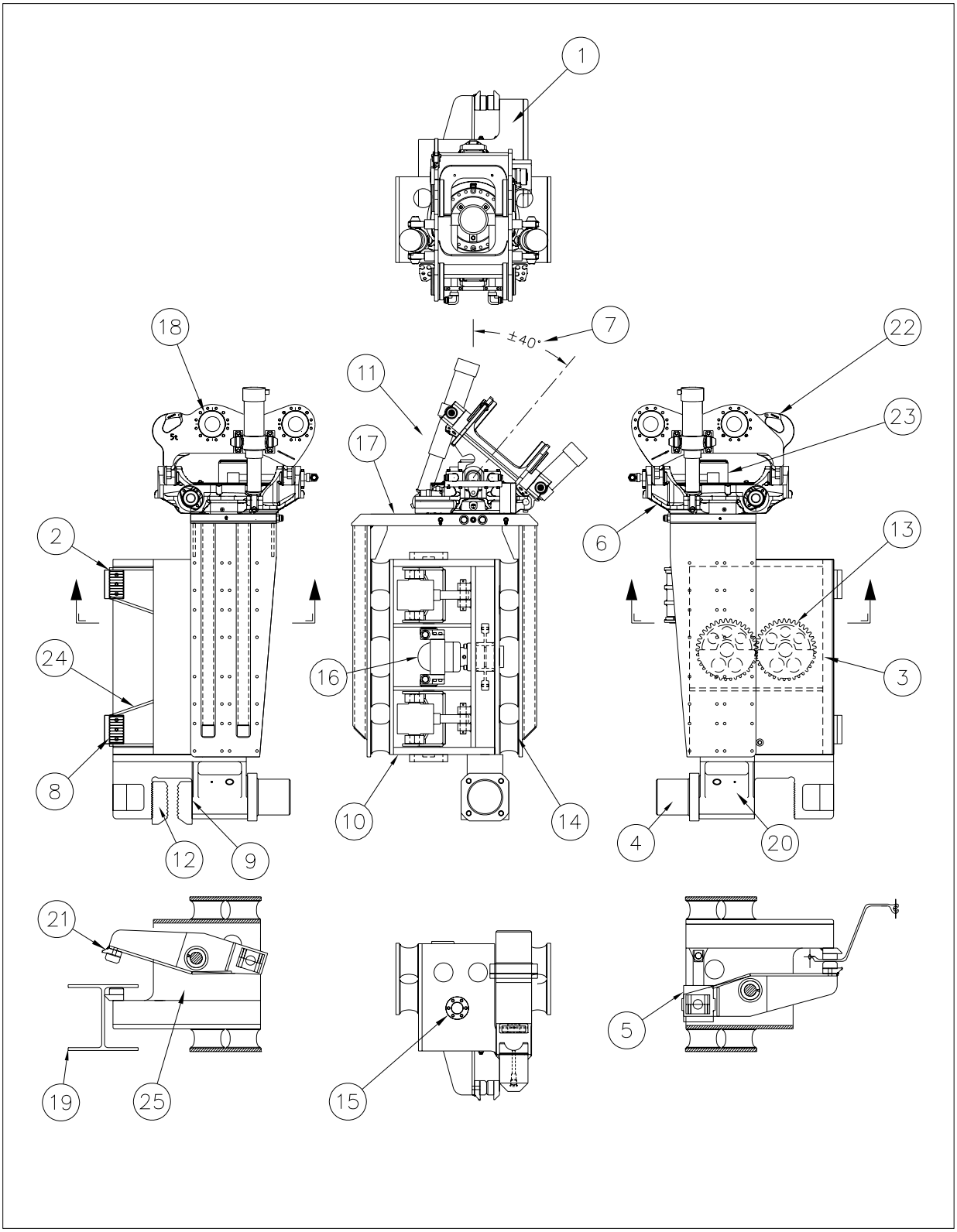

Copyright © 2023 American Piledriving Equipment, Inc. All Rights Reserved

ROBOVIBE
VIBRATORY
DRIVER/EXTRACTOR

ROBOVIBE FEATURES

1. The ROBOVIBE eccentrics are located within the fixed side grip arm. Centerline of dynamic force is much closer to the gripping jaws, reducing off center force input to pile.
2. Vertical distance between side grip jaws is increased to better resists off-center force
3. ROBOVIBE eccentric moment is 22% greater than competitive units, producing significantly larger driving amplitude.
4. Each clamp has an individual actuating cylinder. No poorly guided, trouble prone, dual purpose cylinders as in competitive units
5. Side grip cylinders are directly mounted to arms and are hydraulically synchronized.
6. Proven tilt and rotate mechanism is designed for digging duty, and has sealed lubrication for bearings and worm gear. Cast housing and integral rotation motor maintain perfect alignment for worm gear and massive rotation bearing. Dual tilt cylinders are telescopic, providing lower profile and equal left and right tilt torque.
7. ROBOVIBE +/- 40 deg tilt is 33% more than the competition, allowing additional reach when loading or unloading piles.
8. Rectangular clamp jaws on side grips provide more clamping area than round jaws.
9. Bottom clamp uses precision-guided slider per accepted vibratory hammer practice. Clamp cylinder is directly aligned with the fixed jaw—no offset.
10. Most components contained within welded steel frame for protection and exceptional strength.
11. No solenoid valves or wiring mounted on ROBOVIBE. Valves and wiring are remotely mounted on excavator boom to avoid vibration damage.
12. Standard APE Model 20 bottom clamp jaws are used to minimize inventory. Additionally, all ROBOVIBE jaws have the J&M exclusive “Kryponite” coating for exceptional wear life.
13. Two patented APE one-piece eccentrics simplify design and minimize distance between driving force and pile center.
14. Commonly available elastomers isolate vibration from excavator. Extra elastomer mounting positions are provided so spring rate may be optimized for tough pile extraction applications.
15. Lockable adjusting nuts eliminate clearance in side grip arms to reduce vibration wear, and insure long life
16. Commercial, high pressure gear motor is interchangeable to exactly match excavator hydraulic flow to ROBOVIBE. No flow controls or restrictions to cause damaging heat buildup in excavator hydraulic system.
17. Gun-drilled hydraulic distribution manifold is integral to suspension yoke to minimize plumbing, and perfectly align hydraulic swivel.
18. Replaceable offset bushings at the excavator connection allow pin diameter and center distance changes to accommodate various brands and sizes of excavators.
19. Minimum width, fixed side clamp arm allows driving of H-piles as small as 10”.
20. APE standard bottom clamp w/ chrome plated rod and grease-able via protected fitting.
21. Lips on side grip arms allow “nested” sheet piles to be split for lifting access.
22. Integral sling hook, with safety latch, facilitates lofting piles and other lifting.
23. Large bore hydraulic swivel provides 360 deg continuous rotation, with minimum flow restriction.
24. Wide, T-1 steel side grip arms provide exceptional rigidity to transmit vibratory output force.
25. All hydraulic cylinders are designed for vibratory duty.

Copyright © 2023 American Piledriving Equipment, Inc. All Rights Reserved

I. GENERAL DESCRIPTION

A. GENERAL

The APE ROBOVIBE is a powerful low-frequency vibratory pile driver/extractor designed to drive and extract sheet piles, and wide-flange (H & I) beams. Specially adapted for connection to a hydraulic excavator, the ROBOVIBE facilitates economies of operation by eliminating the requirement for leads, a pile driving crane, redundant personnel and a dedicated power unit, on many pile driving applications. It enables the excavator operator to lift, carry, position and drive piles in a continuous motion.

The ROBOVIBE operates at frequencies up to 1950 vibrations per minute to provide maximum pile penetration rates in a wide variety of soils. The unit has an eccentric moment of 475 inch-pounds (5.5 kg-M) and produces a maximum amplitude of .31 inch (8 mm). Clamps and jaws allow various types and sizes of piling to be driven or extracted by the ROBOVIBE.

B. MANIFOLD ON EXCAVATOR

Hydraulic power to drive the ROBOVIBE comes from a spare circuit on the excavator. A specialized control manifold, mounted on the excavator, allows the ROBOVIBE drive motor, rotary motor, piling clamps and side tilt, to be activated by a single excavator control lever (“joy stick”). The bucket circuit controls the fore and aft tilt via the existing excavator bucket cylinder. The manifold also permits the ROBOVIBE to be used on excavators with various hydraulic system pressures and flows.

Copyright © 2023 American Piledriving Equipment, Inc. All Rights Reserved

I. GENERAL DESCRIPTION

C. SPECIFICATIONS

1. Constant improvement and engineering progress make it necessary that we reserve the right to make specification changes without notice.

2. ROBOVIBE VIBRATOR (w/ clamps) Type: Hydraulic

	Units (US)	Units (SI)
Eccentric Moment	475 in-lb	(5.5kg-M)
Frequency (max)	1950 VPM	
Amplitude	0.31 in (8 mm)	
Bottom Clamp Force	85 Tons	(755kN)
Side Arm Clamp Force (total)	76 Tons	(676kN)
Max. Pull for Extraction	50 Tons	(454kN)
Suspended Weight	4,600 lb	(2087kg)
Length **[L]**	39 in	(99 cm)
Width **[W]**	31 in	(79 cm)
Throat Width **[T]**	35 in	(89 cm)
Height with Clamp **[HH]***	88 in	(224 cm)

*Includes Rototilt yoke

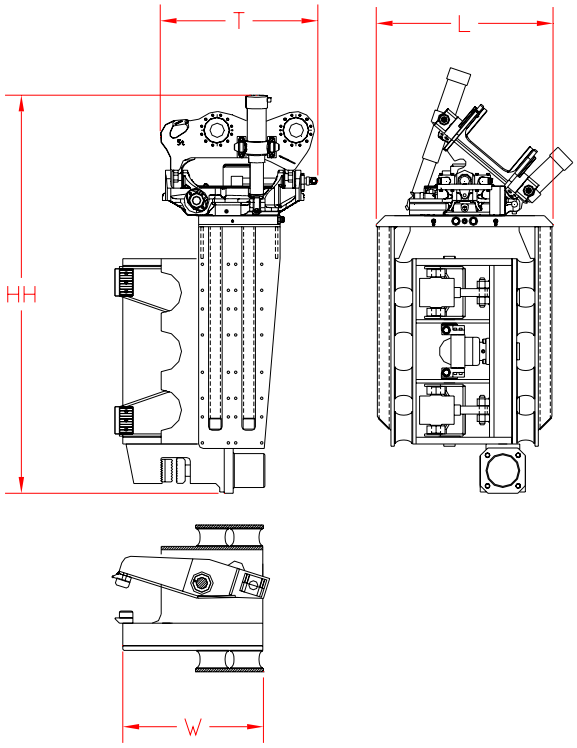

Copyright © 2023 American Piledriving Equipment, Inc. All Rights Reserved

ROBOVIBE
VIBRATORY
DRIVER/EXTRACTOR

Copyright © 2023 American Piledriving Equipment, Inc. All Rights Reserved

II. PREPARATION FOR OPERATION

A. GENERAL

When unloading and unpacking the vibratory driver, use extreme care. For your protection, make a thorough inspection of the unit immediately on delivery. In case of any damage or shortage, notify the transit agent at once and have the delivering carrier make a notation on the freight bill.

B. SAFETY PRECAUTIONS

Safety is basically common sense. There are standard safety rules, but each situation has its own peculiarities which can not always be covered by rules. Therefore, your experience and common sense will be your best guide to safety. Be ever watchful for safety hazards and correct deficiencies promptly.

Use the following safety precautions as a general guide to safe operations:

B. SAFETY PRECAUTIONS

1. Read this manual thoroughly before operating or working on the equipment.
2. Read and follow any safety instructions in the excavator operators manual.
3. Only well trained and experienced personnel should attempt to operate or maintain this equipment.
4. CAREFUL WHEN LIFTING OR CARRYING PILES IN THE VIBRATOR CLAMP. CLAMP MAY LOSE PRESSURE WHEN UNIT IS NOT VIBRATING.
5. Never adjust, lubricate or repair the unit when it is in operation, or lifted above ground level.
6. Never remove, paint over or cover warning or safety labels. If labels become damaged or unreadable, replace immediately.
7. All personnel should wear approved safety clothing, including **HARD HATS, SAFETY SHOES, SAFETY GLASSES** and **HEARING PROTECTION** when in the vicinity of this machinery.
8. Do not stand any closer to this equipment than necessary when it is in operation. Parts may loosen and fall. Never stand under operating, or elevated, equipment.
9. When maintaining or repairing the equipment, never substitute parts not supplied, or approved in writing, by APE.
10. Do not weld, or flame cut, on this equipment.
11. Never use or store flammable liquids on or near the engine.
12. Insure that all lifting equipment, including wire rope, slings, hooks, shackles, etc., are properly sized for the worst case loads anticipated during operations.
13. If there are any questions about the weights, specifications, or performance of the unit, contact APE, or the excavator manufacturer, before handling or operating the equipment.
14. If the equipment is to be used for anything other than driving or extracting plumb piles, contact APE before using the unit.
15. Check wire rope clips for tightness, and check wire ropes for wear, daily.

Copyright © 2023 American Piledriving Equipment, Inc. All Rights Reserved

II. PREPARATION FOR OPERATION

B. SAFETY PRECAUTIONS (CONTINUED)

16. Insure that ground vibrations will not damage or collapse adjacent structures or excavations.
17. Remove all tools, parts and electrical cords before starting the unit.
18. When operating in an enclosed area, pipe excavator exhaust fumes outside. Continued breathing of exhaust fumes may be fatal.
19. When servicing batteries, do not smoke or use open flames in the vicinity. Batteries generate explosive gas during charging. There must be proper ventilation when charging batteries.
20. When filling fuel tank, do not smoke or use open flame in the vicinity.
21. If abnormal equipment operation is observed, discontinue use immediately and correct the problem.
22. Store oily rags in approved containers, and away from engine exhaust system.
23. Make sure that the vibrator control is OFF before starting the excavator engine.
24. Do not adjust, or set, hydraulic pressures higher or lower than those specified in this manual.
25. Never operate this equipment with hydraulic hoses that are damaged or “kinked”. Replace damaged hoses immediately.
26. Be sure that the vibrator connection hoses do not kink, or pull tight, at any point within the full range of excavator motion.
27. Never attempt to connect quick disconnects when the engine is running.
28. Do not pull on, or allow hoses to get snagged, when moving the excavator.
29. Do not attempt to locate hydraulic leaks with your hands. High pressure hydraulic leaks can penetrate the skin, causing severe damage, blood poisoning and infection. Do not attempt to repair leaks while the equipment is in operation.
30. Do not attempt to tighten, or loosen, fittings or hoses when the machine is in operation.
31. Always check the excavator load radius chart before lifting vibrator and/or piles.
32. Check vibrator swivel retaining nut, and swivel nut locking bolt for tightness daily.
33. A properly maintained fire extinguisher, suitable for oil fires, must be kept in the immediate vicinity of equipment operations.
34. When moving or transporting this equipment, insure that the vehicle or vessel is of sufficient capacity to handle the load, and that the equipment is properly tied down.
35. Be sure that all equipment parts are tight, or properly secured, before shipment. Unsecured parts may vibrate loose and fall, during transport, causing injury or property damage.
36. Keep excavator, piles, vibrator, wire rope and other equipment at least 15’ (5M) from electrical power lines, transformers and other electrical equipment, or at such distance as required by applicable safety codes.

Copyright © 2023 American Piledriving Equipment, Inc. All Rights Reserved

II. PREPARATION FOR OPERATION

B. SAFETY PRECAUTIONS (CONTINUED)

37. Rounded or damaged bolt heads or nuts should be replaced so that proper torque values may be obtained. Proper torque values are necessary to prevent parts on this equipment from loosening and falling. Refer to Torque Chart, in this manual, for proper values.
38. Careful when using vibrator clamp to move piles. Loss of hydraulic pressure could cause piles to fall.
39. Never clamp vibrator to pile and disconnect from excavator. Loss of hydraulic pressure could cause vibrator to fall. Lay vibrator down when not in use.
40. When extracting piles, always attach a safety line between pile and the excavator.
41. When extracting piles, check excavator load/radius tables to be sure capacity is adequate for maximum allowable extraction pull.
42. When extracting piles, or any other driving operations, always be sure that the excavator bucket pivot pin is aligned with the centerline of the pile. Do not side load the vibrator. Dangerous vibrator damage may result.
43. When extracting piles, do not exceed the capacity of the vibrator suppressor.
44. Check vibrator suppressor for broken, or damaged, elastomers daily. Do not operate vibrator with damaged elastomers.
45. Never pull on a vibrator before starting the unit in vibration. Always start both driving and extraction of piles in an unloaded condition.
46. Keep hands away from clamp jaws.
47. Keep hands away from vibrator suppressor during operation. Clearances may change causing pinch points.
48. Do not run vibrator unless clamp jaws are closed.
49. Use a tag line to control vibrator whenever possible.

REMEMBER, SAFETY IS EVERYONE'S BUSINESS.

C. RIGGING OF VIBRATOR

1. EXCAVATOR PREPARATION

WARNING: ALWAYS BE SURE THAT EXCAVATOR PARTS, AND/OR ROBOVIBE, ARE FULLY SUPPORTED WHEN REMOVING MOUNTING PINS, TO PREVENT SUDDEN SHIFTS AND INJURY.

a. Remove bucket pivot pin, bucket link pin and bucket..
b. Remove bucket linkage pins from stick (dipper arm) and bucket cylinder pin (rod end). Remove bucket linkage.

2. ROBOVIBE INSTALLATION

a. The Rototilt mechanism can be custom ordered with bushings to fit a variety of excavators. Check the Rototilt yoke to be sure that the ears fit onto the excavator stick, in the area of the bucket pivot. Axial play of the yoke should not exceed ½"(12mm).

Copyright © 2023 American Piledriving Equipment, Inc. All Rights Reserved

II. PREPARATION FOR OPERATION

C. RIGGING OF VIBRATOR (CONTINUED)

b. Check the fit of the yoke pin in the bucket pivot bore on the stick. If bushings were provided, check the pin fit with bushings installed. Maximum pin (bushing) clearance should not exceed .04”(1mm).
c. If all fits are correct, connect ROBOVIBE yoke to the excavator stick.
d. Move excavator to the ROBOVIBE location. Lift, and safely support. the ROBOVIBE in a vertical position.
e. Connect the yoke to the ROBOVIBE, using the excavator swivel pins.

NOTE: If frequent changes are anticipated, between pile driving and digging operations, it may be more convenient to install quick disconnect fittings on the ROBOVIBE and bucket cylinder pipes. Contact APE, or your excavator dealer, for advice on quick disconnects fittings.

f. AUXILIARY CIRCUIT: Most excavators are equipped with internal valving, and piping along the boom and stick, to accommodate breakers and other types of auxiliary attachments. Use this auxiliary circuit to operate the ROBOVIBE. **However,** some excavators only have one way flow in their auxiliary circuit, which will not allow its use with a ROBOVIBE. Secondly, many excavators use drastically reduced tubing and hose diameters in their auxiliary circuit, which will generate excessive heat with the oil flows required by a ROBOVIBE. Finally, the types of cab mounted controls used in some excavators will not allow the fine control desirable for ROBOVIBE operations. Prior to connecting the ROBOVIBE to the excavator auxiliary circuit, contact APE or your excavator dealer.
g. Measure the lengths of hydraulic hose that will be required to connect the NPT fittings on the ROBOVIBE Rototilt mechanism to the control manifold (mount on boom). Include enough extra hose length to allow the ROBOVIBE to tilt forward using the excavator bucket cylinder. See manifold assembly drawing D8834 for the location of the fittings.
h. Measure the lengths of low pressure, hydraulic hose that will be required to connect the NPT fitting on the ROBOVIBE manifold, to excavator hydraulic reservoir, in the engine compartment. (this hose will have to be tied to the boom and stick to prevent fouling). Include enough extra hose length to allow the full range of motion of the excavator stick and boom.

Copyright © 2023 American Piledriving Equipment, Inc. All Rights Reserved

II. PREPARATION FOR OPERATION

C. RIGGING OF VIBRATOR (CONTINUED)

3. GAGE HOSE: It is recommended that a 0-3000 PSI pressure gage be installed, within convenient view of the excavator operator, for situations when the operator desires to close the ROBOVIBE clamp, without starting the vibrator.(See manifold assembly drawing for fitting location).
   a. Measure the length of ¼" ID hydraulic hose that will be required to connect the gage fitting, on the ROBOVIBE manifold, to the desired gage location. Include enough extra hose length to allow the full range of motion of the excavator stick and boom. Gage hose pressure rating to be 3000 PSI minimum.
   b. Order and install the hoses measured above. Be sure that the hose working pressures match or exceed the maximum pressure for your specific ROBOVIBE application. See the first page of this manual for pressure settings that are specific to your ROBOVIBE.
   c. After the hoses are installed, slowly move the ROBOVIBE, and the excavator, through full range of motion to be sure that hoses do not bind or pull tight.
   d. Fasten the non-flexing portions of the hoses to convenient structures on the boom and stick. Re-check range of motion.
   e. To bleed the air from the hoses, loosen the two 0.38" ID hoses at the ROBOVIBE clamp cylinder (approx. one turn). With the excavator running at low RPM, move the AUX control joy stick **slightly** into the clamp close posi-tion. Wait until oil flows from the connection at the hydraulic clamp (clamp close). When oil flows without air, tighten the connection. Now move the bucket control joy stick **slightly** into the clamp open position. Wait until oil flows from the connection at the hydraulic clamp (clamp open). When oil flows without air, tighten the connection.

4. CHANGING EXCAVATORS
   a. NEVER SWITCH THE ROBOVIBE TO AN EXCAVATOR OF A DIFFERENT MAKE OR MODEL WITHOUT CONTACTING APE/J&M. Moving a ROBOVIBE to a different excavator than it was designed for can cause serious vibrator damage, or inferior performance. To move a ROBOVIBE to a different excavator, the following items must be analyzed by APE/J&M personnel to insure a correct match to the new excavator;
      i. Yoke width
      ii. Yoke pin diameter
      iii. Hydraulic motor size
      iv. Manifold pressure settings
      v. Excavator horsepower
      vi. Excavator hydraulic system
   b. For the convenience of the owner, a ROBOVIBE application form has been included as page VIII-20 of this manual. If it is contemplated to move the ROBOVIBE to a different excavator, complete this form and mail, e-mail, or fax, this form to your local APE office.

Copyright © 2023 American Piledriving Equipment, Inc. All Rights Reserved

III. OPERATING INSTRUCTIONS

A. COMPLETION OF SET-UP AND MAINTENANCE

1. Complete all preparation as described in Section II.

2. Read all safety instructions in Section I.

3. Read Section IV - MAINTENANCE AND ADJUSTMENTS and perform any required maintenance.

4. Before starting the ROBOVIBE, read the the EXCAVATOR OPERATION GUIDE carefully. Follow the engine starting, operating and maintenance procedures in that manual.

B. WARMING HYDRAULIC OIL

1. The vibrator should not be operated at full speed if the temperature of the hydraulic oil is below 70°F (21°C).

2. If temperature of the hydraulic oil is below 70°F (21°C), run the vibrator at reduced speed until the temperature of the hydraulic oil exceeds 70°F (21°C). Vibrator should be clamped to a pile during warm up.

3. When the engine is warmed up and hydraulic oil temperature is at least 70°F (21°C), full speed operation may begin. Adjust the throttle so the engine is running at maximum RPM, unloaded.

CAUTION: Do not operate the vibrator if hydraulic oil temperature exceeds 160°F (71°C) as this may damage hydraulic components.

C. CONVENTIONS OF OPERATION

1. DRIVE - Causing the gears/eccentrics in the ROBOVIBE gearbox to rotate, shall hereinafter be referred to as DRIVE
2. CLOSE – Causing the movable jaws, in the ROBOVIBE clamp, to move toward the fixed jaws, shall hereinafter be referred to as causing the clamp to CLOSE.
3. OPEN – Causing the movable jaw, in the ROBOVIBE clamp, to move away from the fixed jaw, shall hereinafter be referred to as causing the clamp to OPEN.
4. ROTATE - Causing the ROBOVIBE hammer, including frame & gearbox, to rotate relative to the Rototilt mechanism, shall hereinafter be referred to as causing the hammer to ROTATE.
5. TILT - Causing the ROBOVIBE hammer, including frame, gearbox & Rototilt ro-tor, to tilt relative to the Rototilt multi-attachment, shall hereinafter be referred to as causing the hammer to TILT.

Copyright © 2023 American Piledriving Equipment, Inc. All Rights Reserved

III. OPERATING INSTRUCTIONS

D. POSITIONING THE PILE AND ROBOVIBE

1. MANEUVER THE EXCAVATOR INTO A SAFE, STABLE OPERATION POSTION NEAR THE PILES AND THE DESIRED DRIVING AREA.
2. ALWAYS REFER TO THE EXCAVATOR “LIFT RADIUS CHART” TO BE SURE THAT THE WEIGHT OF THE VIBRATOR, AND PILE, ARE WITHIN THE SAFE LIMITS OF THE MACHINE.
3. DO NOT ATTEMPT TO LIFT OR WALK WITH PILES EXCEEDING 10 TONS WEIGHT.
4. MANUEVER EXCAVATOR / ROBOVIBE SO AS TO CLAMP SECURELY ONTO PILE USING ROBOVIBE SIDE ARM CLAMPS. ROBOVIBE SHOULD BE PARALLEL TO PILE IN ORDER TO ACHIEVE UNIFORM CLAMPING.
5. CAREFULLY LIFT AND ROTATE PILE USING EXCAVATOR CONTROLS.
6. EXERCISE CAUTION WHEN LIFTING OR CARRYING PILES IN THE ROBOVIBE CLAMP. CLAMP MAY LOSE PRESSURE WHEN UNIT IS NOT VIBRATING.
7. LIFT / ROTATE THE PILE TO VERTICAL, AND MOVE TO THE DESIRED DRIVING LOCATION.

DI. DRIVING OPERATIONS

Using the ROBOVIBE is unlike using a conventional excavator. The use of side arm clamps will require periodic release and re-clamping during driving.

1. Insure that the ROBOVIBE clamp is fully CLOSED (joystick CLAMP button).
2. To establish initial pile set, start driving. Press the joystick vibrator trigger. The ROBOVIBE will then, automatically, start to vibrate, at maximum vibrations per minute (VPM). Once desired initial set is achieved, the clamp can be re-positioned onto the pile.
3. To move clamp, insure that the ROBOVIBE clamp is OPEN. Slide the ROBOVIBE clamp along the piling into the desired location. Be sure that the ROBOVIBE is parallel to the centerline of the pile before closing the clamp.
4. NOTE: If it is desired to close the clamp, without starting the vibrator, push the the AUX control joystick clamp button, while watching the clamp pressure gage (see SECTION II, RIGGING OF VIBRATOR). When clamp pressure reaches approximately 2000 PSI, release the button. The clamp will close, but the vibrator will not start.
5. ROBOVIBE VPM may be reduced by slowing the excavator engine RPM.
6. As the piling penetrates the ground, it is **IMPORTANT** that the excavator operator manipulates the boom and stick functions to follow the pile in a vertical, straight line, path. Serious damage to the vibrator will result, if the operator attempts to push or pull the ROBOVIBE, perpendicular to the centerline of the piling.

Copyright © 2023 American Piledriving Equipment, Inc. All Rights Reserved

III. OPERATING INSTRUCTIONS

E. DRIVING OPERATIONS (CONTINUED)

7. To accelerate pile penetration, it is permissible to apply moderate downward force to the ROBOVIBE, with the excavator. DO NOT APPLY MORE THAN 10 TONS OF DOWNWARD FORCE, OR CAUSE ANY PART OF THE VIBRATOR SUPPRESSOR HOUSING TO COME IN CONTACT WITH THE TRANSMISSION.
8. When the pile has reached the proper elevation, return the joy stick to the NEUTRAL position. The vibrator will stop in a few seconds. DO NOT open the clamp until the vibrator has come to a complete stop.
9. To open the clamp, move the joy stick, partially, toward the REVERSE position. The clamp will open. Insure that the clamp is fully open before removing the vibrator from the pile.
10. Disconnect the sling, and remove the ROBOVIBE from the pile.

F. EXTRACTING OPERATIONS

1. Using a short wire rope sling, connect the pile to the lifting eye on the bottom of the ROBOVIBE.
2. INSURE THAT THE HOLE IN THE PILE, OR PILE LIFTING DEVICE, IS ADEQUATE TO LIFT THE WEIGHT OF THE PILE.
3. INSURE THAT THE SLING IS RATED FOR THE WEIGHT OF THE PILE.
4. ALWAYS REFER TO THE EXCAVATOR “LIFT RADIUS CHART” TO BE SURE THAT THE WEIGHT OF THE VIBRATOR, AND PILE, ARE WITHIN THE SAFE LIMITS OF THE MACHINE.
5. INSURE THAT ALL SHACKLES, AND OTHER LIFTING FIXTURES, ARE SAFETY WIRED, OF OTHERWISE LOCKED, TO PREVENT LOOSENING FROM VIBRATION.
6. DO NOT ATTEMPT TO LIFT OR WALK WITH PILES EXCEEDING 10 TONS WEIGHT.
7. Insure that the ROBOVIBE clamp is fully OPEN.
8. Slide the ROBOVIBE clamp fully down onto the piling. If the pile top is damaged, **DO NOT** attempt to force, or drive, the clamp onto the pile. Discard or repair damaged piles.
9. Be sure that the ROBOVIBE is parallel to the centerline of the pile before closing the clamp.
10. NOTE: If it is desired to close the clamp, without starting the vibrator, move the bucket control joy stick **slightly** toward the FORWARD position, while watching the clamp pressure gage (see SECTION II, RIGGING OF VIBRATOR). When clamp pressure reaches approximately 2000 PSI, quickly return the joy stick to the NEUTRAL position. The clamp will close, but the vibrator will not start.
11. To start extracting, move the excavator joy stick (bucket control) to the full FORWARD position. The clamp will CLOSE, and achieve maximum clamping force. The ROBOVIBE will then, automatically, start to vibrate, at maximum vibrations per minute (VPM).

Copyright © 2023 American Piledriving Equipment, Inc. All Rights Reserved

III. OPERATING INSTRUCTIONS

F. EXTRACTING OPERATIONS (CONTINUED)

12. ROBOVIBE VPM may be reduced by slowing the excavator engine RPM.
13. To extract the pile, apply an upward force, with the excavator, of up to 30 tons. EXCAVATOR UPWARD FORCE **MUST BE LIMITED** TO PREVENT MORE THAN 6" OF UPWARD MOVEMENT OF THE SUPPRESSOR HOUSING, RELATIVE TO THE VIBRATOR TRANSMISSION,
14. As the piling exits the ground, it is **IMPORTANT** that the excavator operator manipulates the boom and stick functions to follow the pile in a vertical, straight line, path. Serious damage to the vibrator will result, if the operator attempts to push or pull the ROBOVIBE, perpendicular to the centerline of the piling.
15. When the pile has reached an elevation where vibration is no longer required to extract the pile, stop lifting and release the VIBRATION TRIGGER. The vibrator will stop in a few seconds. SUFFICIENT LENGTH OF PILE MUST REMAIN IN THE GROUND TO SUPPORT THE PILE WHEN THE CLAMP IS OPENED. DO NOT open the clamp until the vibrator has come to a complete stop.
16. To open the clamp, push the CLAMP BUTTON on joystick, partially toward the REVERSE position. The clamp will open. Insure that the clamp is fully open before removing the vibrator from the pile.
17. Re-clamp the pile, and lift the ROBOVIBE until the pile pulls fully out of the ground.
18. Move the excavator to lay the pile down in the desired location.

Copyright © 2023 American Piledriving Equipment, Inc. All Rights Reserved

IV. MAINTENANCE AND ADJUSTMENTS

A. GENERAL

Preventive maintenance includes normal servicing that will keep the vibratory driver and clamp in peak operating condition and prevent unnecessary trouble from developing. This servicing consists of periodic lubrication and inspection of the moving parts and accessories of the unit.

Lubrication is an essential part of protective maintenance, controlling to a great extent the useful life of the unit. It is important that the instructions regarding types of lubricants and frequency of their applications be closely followed.

To prevent minor irregularities from developing into serious conditions, that might involve shut-down and major repair, several other services or inspections are recommended for the same intervals as the periodic lubrications. The purpose of these services or inspections is to assure the uninterrupted operation of the unit.

Thoroughly clean all lubrication fittings, caps, filler and level plugs and their surrounding surfaces before servicing. Prevent dirt from entering with lubricants. The intervals given in the schedule are based on normal operation. Perform these services, inspections, etc., more often for operation under abnormal or severe conditions.

B. DAILY

1. Check the entire unit prior to and during set-up each day or at the beginning of each shift.

2. Prior to starting driving operations or at the beginning of each shift, check the following items:
   a. Visibly inspect all bolts, nuts and screws including the bolts fastening the hydraulic clamp to the vibration case to insure they are tight. IMPORTANT: vibration loosens bolts- check carefully.
   b. Tighten bolts holding gripping jaws to the hydraulic clamp.
   c. Inspect pins connecting clamp arms to vibrator housing.
   d. Grease plunger in hydraulic bottom clamp with any good multi-purpose grease.
   e. Grease tilt cylinders with any good multi-purpose grease.
   f. Grease Positech rotary manifold with any good multi-purpose grease.

Copyright © 2023 American Piledriving Equipment, Inc. All Rights Reserved

IV. MAINTENANCE AND ADJUSTMENTS

B. DAILY (CONTINUED)

g. Check the oil level in the vibration case and add oil if required. Change oil if milky or contaminated. DO NOT OVERFILL

CAUTION: It is absolutely imperative that no dirt or other impurities be permitted to contaminate the transmission case. Any contamination will drastically shorten the life of the vibrator bearings.

h. Visually check all hoses for signs of damage or cuts that might cause hose failure during operation. Be sure all connections are tight.
i. Visually inspect all suppressor elastomers.
j. Perform all daily maintenance checks and lubrication indicated in the EXCAVATOR OPERATION GUIDE.

3. After engine start-up, check the following:
   a. Check all hydraulic hoses for leaks. Make sure they hang freely with no kinks.
   b. Check hydraulic motor and hydraulic manifold for leaks.

C. 100 HOURS

1. Every 100 hours, drain and add new lubricant in the vibration case.

D. SEVERE CONDITIONS

The servicing intervals specified are based on normal operating conditions. Operation under severe or unusual conditions will require some adjustments in servicing intervals.

1. When the average temperature is above 80°F (26°C) or below -10°F (-23°C), reduce service time intervals by one-half of those specified above.
2. When operating in the presence of dust or sand, reduce service time intervals by one-half of those specified.
3. When operating in excess of twelve hours per day, reduce service time intervals by one-half of those specified.
4. When operating in air with high salt or moisture, the servicing intervals need not usually be changed. However, the unit should be inspected weekly to determine if additional servicing be required.
5. For extended inactive periods, servicing time intervals may be extended from those specified, but for actual time intervals, contact you local APE dealer, especially during lengthy storage periods.

Copyright © 2023 American Piledriving Equipment, Inc. All Rights Reserved

IV. MAINTENANCE AND ADJUSTMENTS

E. LUBRICATION

1. Vibration Case

The oil level is easily read through the sight glass located at the lower center of the vibration case on the motor side. Lubricating oil may be added when necessary, through the hole in the vibration case top plate, after removing the pipe plug. To drain the case, remove the pipe plug at the end of the base plate. Tilt the case for complete drainage.

The preferred lubricating oil for APE vibration cases is “High Moly” oil (Schaeffer 268). Longer intervals between oil changes and fewer maintenance hours spent on mechanical service can generally be realized with this oil.

Therefore, whenever the "first preferred" oil is not available, or desired, and an alternate oil is selected, it will be necessary to test and/or change the oil at shorter intervals.

Extensive tests have indicated that the use of Schaeffer 268 results in cooler operation and extended bearing and gear life.

a. The vibration case lubricant installed at the factory is Schaeffer 268 but the following gear lubes may be used when changing lubricants:

FIRST Preference Group:

SCHAEFFER	268

SECOND Preference Group:

MOBIL	SHC-634	
BORON	Gearep 140	
CHEVRON	Gear Comp. NL460	
CITGO	Premium MP 85W-140	
CITGO	Standard MP 85W-140	
GULF	Lub 85W-140	Lub 85W-140
PHILLIPS	MP 85W-140	
SHELL	Omala 460	Omala 460
SUN	Sunep 1110	

Copyright © 2023 American Piledriving Equipment, Inc. All Rights Reserved

IV. MAINTENANCE AND ADJUSTMENTS

E. LUBRICATION (CONTINUED)

THIRD Preference Group (Natural Petroleum Base):

AMOCO	Perma Gear EP140
ARCO	Pennant NL 460
CONOCO	EP 460
EXXON	Spartan EP 460
PHILLIPS	AP 140
TEXACO	Meropa 460
UNION	MP 85W-140
VALVOLINE	Gear Lub 85W-140

SCHAEFFER 268 Lubricant is available from APE in five gallon cans. See SECTION VIII ORDERING PARTS, page VIII-15

F. CAPACITIES

1.	Vibration Case	1.5	Gallons
2.	Swivel Bearings Grease	5	Pounds

Copyright © 2023 American Piledriving Equipment, Inc. All Rights Reserved

IV. MAINTENANCE AND ADJUSTMENTS

G. BOLT TORQUE INFORMATION

The only way to correctly tighten high strength bolts is with a calibrated torque wrench. Proper use of the torque wrench is important. To obtain the listed torques, a steady pull should be exerted to the handle until the desired torque is reached.

The following torque specifications apply to the bolts from the vibrator assemblies listed. Whenever any of these bolts, are replaced, the given torque specifications should be adhered to.

Please refer to Section VII for proper torque values.

Copyright © 2023 American Piledriving Equipment, Inc. All Rights Reserved

. PROCEDURES AND ADJUSTMENTS

C. CLAMP LUBRICATION

1. Clean grease fitting on the side on the Clamp Casting (150398).
2. Partially extend the clamp cylinder.
3. Connect grease gun to fitting, and pump until grease exits around the cylinder rod.
4. OPEN and CLOSE the clamp several times, and repeat steps “2” and “3” above.

CI. ROTOTILT

1. Lubrication
   a. Clean the grease fitting, located in a hole in the side of the suppressor housing. Also, clean the swivel pin fitting, located on the side of the swivel stud 130535.
   b. Connect grease gun to fitting, and pump until grease exits around the top, or bottom, of the swivel.
   c. Connect grease gun to swivel pin fitting, and pump until grease exits around the ends of the pin bore.

2. Bearing Adjustment
   a. Lay ROBOVIBE on the ground, with the swivel grease fitting up.
   b. Remove the Yoke from the swivel stud, by removing swivel pin 130541.
   c. Rotate the swivel stud to align the locking bolt with the hole in the suppressor. Loosen the swivel nut 130537 locking bolt 130849, by inserting a ½” hex key through the hole in the suppressor side, and unscrewing this .625-11UNC X 5.00 Lg SHCS.
   d. The hex key must remain in the locking bolt SHCS, as this is the only way to prevent the swivel nut from turning.
   e. With the hex key in place, turn the swivel stud clockwise, to tighten the swivel nut. This will pre-load the swivel bearings.
   f. Remove the hex key and rotate the swivel stud by hand. The stud should be difficult, but not impossible, to turn by hand. If the adjustment is not correct, repeat steps “4” and “5” above.
   g. When adjustment is correct, re-tighten the swivel nut locking bolt to 230 Ft-Lbs (32.3Kg-M).

Copyright © 2023 American Piledriving Equipment, Inc. All Rights Reserved

ROBOVIBE
VIBRATORY DRIVER/
EXTRACTOR

Copyright © 2023 American Piledriving Equipment, Inc. All Rights Reserved

VI. HYDRAULIC CIRCUITRY -SCHEMATIC

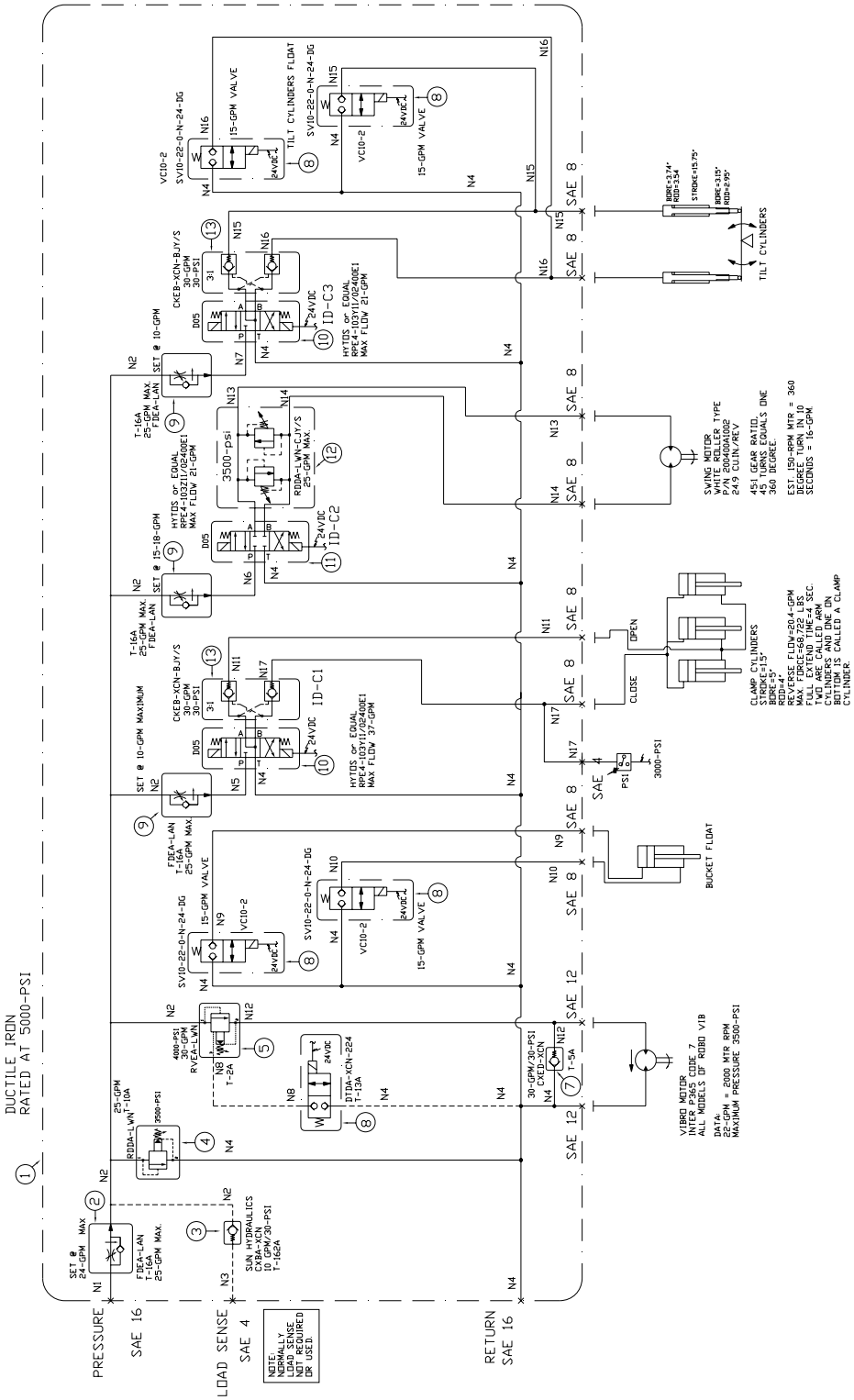

Copyright © 2023 American Piledriving Equipment, Inc. All Rights Reserved

VI. HYDRAULIC CIRCUITRY

HYDRAULIC COMPONENTS LIST

a. Control Manifold 173049 (J&M) See Sec. VIII
b. ROBOVIBE Vibrator 175065 (J&M) See Sec. VIII

Copyright © 2023 American Piledriving Equipment, Inc. All Rights Reserved

VII. GENERAL DATA

A. ABBREVIATIONS

The abbreviations shown below are used throughout the parts lists and various other parts of the manual.

ASM.	Assembly
BHCS	Button Head Cap Screw
Cyl.	Cylinder
DC	Direct Current
FHCS	Flat Head Cap Screw
FLCS	Flanged Head Cap Screw
HC	High Collar
HHCS	Hex Head Cap Screw
HHPP	Hex Head Pipe Plug
HSSS	Hex Socket Set Screw
Hyd.	Hydraulic
Lg.	Long
mm	Millimeter
Mtg.	Mounting
NPT.	National Pipe Thread
PHMS	Phillips Head Machine Screw
P/N	Part Number
RHMS	Round Head Machine Screw
Sch.	Schedule
SHCS	Socket Head Cap Screw
SHPP	Socket Head Pipe Plug
SHSS	Socket Head Shoulder Screw
S/N	Serial Number
Sol.	Solenoid
Qty.	Quantity

B. SCREWS AND BOLTS

1. Almost all connections on the unit are made with socket head (Allen) cap screws. These high-strength screws are available from most industrial suppliers.
2. Screws and bolts are designated in the PARTS LIST in abbreviated form. (Refer to sub-section A, above, for specific abbreviations.) Listed below is a typical screw description:
   .5 - 13 UNC x 1.50 LG SHCS .5 = Diameter
   13 UNC = Threads Per Inch
   1.50 LG = Length
   SHCS = Screw Type Abbreviation
3. Some screws or bolts require a specific torque when replacing. For identification of these bolts and a more thorough understanding of torque, refer to Page IV-5.

Copyright © 2023 American Piledriving Equipment, Inc. All Rights Reserved

VII. GENERAL DATA

C. SERIAL NUMBER LOCATIONS

1. APE vibratory units are serial numbered separately:

2. In addition to the serial number plate itself (on vibrators), the serial number is stamped into each unit in one or more places as follows:
   a. The vibrator stamped twice - once on top left side of suppressor housing by the manifold, once on bottom lip of vibration case on right side of sight gage.

Copyright © 2023 American Piledriving Equipment, Inc. All Rights Reserved

VIII. ORDERING PARTS

A. PROCEDURE

1. When ordering parts, be sure to include the model and serial number of the unit or component. The serial number may be located by referring to SECTION VII, SERIAL NUMBER LOCATION. Confirm all telephone orders, in writing immediately to avoid duplicating shipment.

2. ORIGINAL EQUIPMENT; Where component serial numbers are given, these apply only to equipment and components originally furnished with the unit. Where equipment has been changed or upgraded these numbers may not be an adequate description.

3. SHIPMENT; State to whom shipment is to be made and method of shipment desired, otherwise our own judgment will be used.

4. SHORTAGES; Claims for shortages or errors should be made immediately upon receipt of parts. No responsibility will be assumed for delay, damage or loss of material while in transit. Broken, damaged or lost material should be refused or a full description made of damage or loss to the carrier agent on the freight or express bill.

5. RETURN OF PARTS; If for any reason you desire to return parts to the factory or to any distributor from whom these parts were obtained, you must first secure permission to return the parts. Shipping instructions will be given along with this permission. A ten percent handling charge must be assessed against the returned shipment unless an error is made by the factory or by the distributor when filling your order.

Copyright © 2023 American Piledriving Equipment, Inc. All Rights Reserved

VIII. ORDERING PARTS

D. PARTS IDENTIFICATION

1. Parts lists and drawings are included on the following pages for the equipment components shown below:

ROBOVIBE VIBRATOR	**175065 (J&M)**
a. ROTOTILT ASM w/ CYLINDERS & MOTOR	173043 (J&M)
b. ROTOTILT MULTI ATTACHMENT	150661 (J&M)
c. ROTOTILT ROTOR SUB-ASM	150662 (J&M)
d. UPPER ARM SUB-ASM	150323 (J&M)
e. LOWER ARM SUB-ASM	150325 (J&M)
f. BOTTOM CLAMP SUB-ASM	810892 (APE)
g. GEARBOX / FRAME SUB-ASM	810899 (J&M)
h. POSITECH ROTARY MANIFOLD	173045 (J&M)
i. VIBRATION SUPPRESSOR / YOKE	150349 (J&M)
j. ARM CYLINDER ASM	810897 (J&M)
k. HOSE KIT	810902 (J&M)
l. FITTING KIT	810906 (J&M)
m. BOLT KIT	810903 (J&M)
n. BOTTOM CLAMP SEAL KIT	208010 (APE)
o. ARM CLAMP SEAL KIT	810905 (J&M)

EXCAVATOR-MOUNTED PARTS	175067
a. JOYSTICK	150383 (J&M)
b. J-BOX & RELAY PANEL	5770-5301-D
c. FOOT PEDAL	
c. HYDRAULIC CONTROL MANIFOLD	173049 (J&M)
e. MOUNTING BRACKETRY	150401 (J&M)

2. The spare parts list SECTION VIII - RECOMMENDED SPARE PARTS contains spare parts which may be very useful in keeping down-time to a minimum, especially in remote or secluded job sites where unforeseen communication problems could cause delay of the delivery of an awaited part.

   These RECOMMENDED SPARE PARTS may be ordered beforehand, individually or as a package group as shown in the PARTS LIST.

Copyright © 2023 American Piledriving Equipment, Inc. All Rights Reserved

Copyright © 2023 American Piledriving Equipment, Inc. All Rights Reserved

ROBOVIBE VIBRATOR

175065

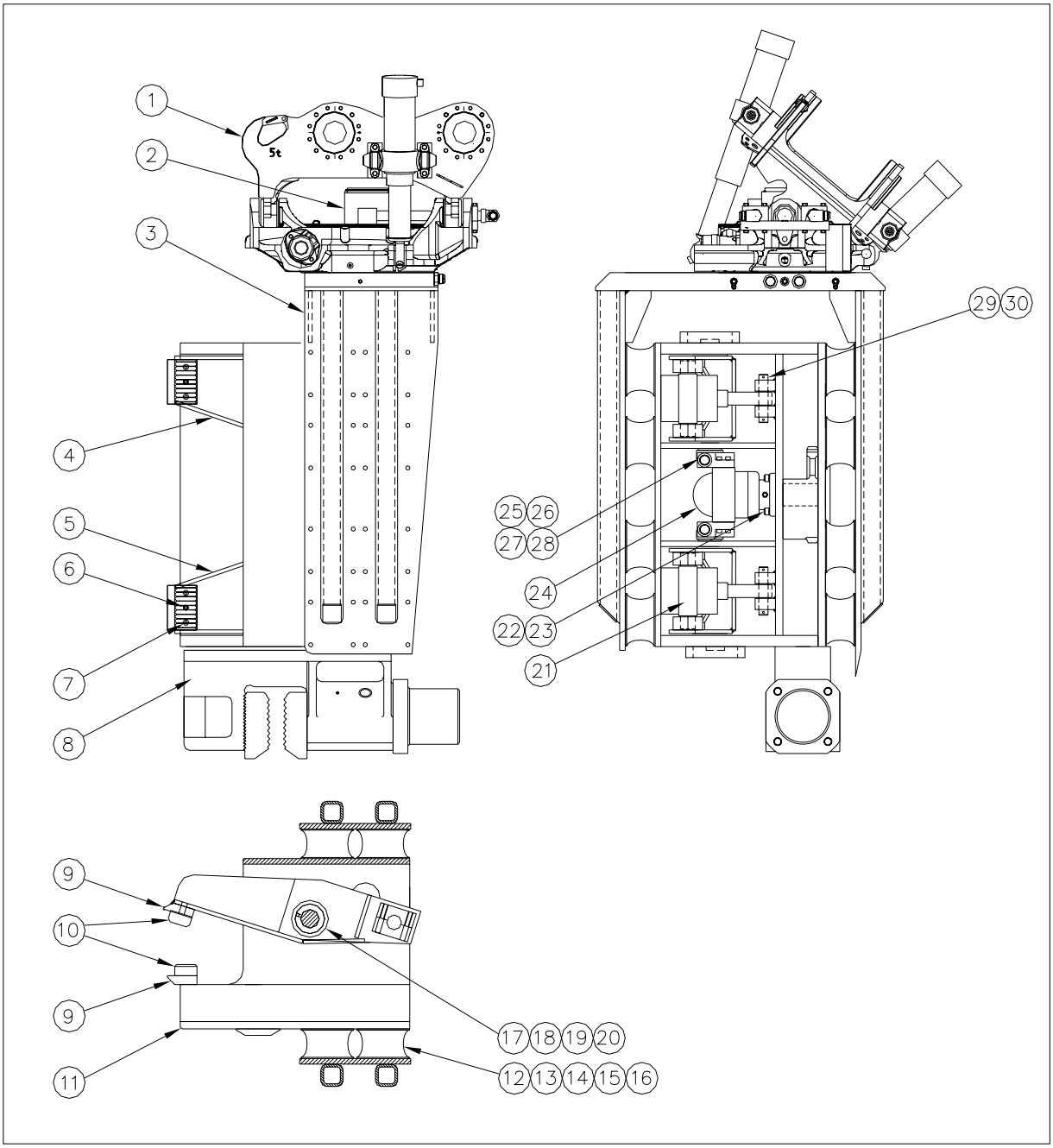

Copyright © 2023 American Piledriving Equipment, Inc. All Rights Reserved

ROBOVIBE VIBRATOR 175065

Item	J&M Part Number	Qty.	Description
1	173043	1	Rototilt Sub-Asm
2	173045	1	Positech Rotary Manifold
3	150349	1	Suppressor Yoke
4	150325	1	Upper Arm Sub-Asm
5	150323	1	Lower Arm Sub-Asm
6	810903	2	5/8 NC x 2-1/2” SHCS
7	150449	11	3/4 x 3” Spiral Roll Pin
8	810892	1	Bottom Clamp Sub-Asm
9	150328	4	Arm Clamp Jaw Mount
10	150327	4	Arm Clamp Jaw
11	810899	1	Gearbox / Frame
12	130023	16	Elastomer
13	810903	28	1/2 NC X 2” SHCS
14	810903	64	1/2 NC X 1” SHCS
15	810903	36	1/2 NC X 1-1/4” SHCS
16	810903	64	1/2 NC Stover Nut
17	150331	2	Shaft - Arm
18	150333	2	Nut - Jam
19	150335	2	Nut - Arm Shaft
20	150425	2	Supernut SJX-175-12/W
21	810897	2	Hydraulic Cylinder Sub-Asm
22	810903	4	1/2 NC x 1-1/2” SHCS
23	810903	4	1/2 Hi-Collar Lock Washer
24	150433	1	Vibro Motor
25	150351	1	Motor Flange - Top
26	150353	1	Motor Flange - Bottom
27	810903	8	7/16 NC X 2” SHCS
28	810903	8	7/16 Hi-Collar Lock Washer
29	150646	2	Clamp Arm Cylinder Pin
30	810903	2	1/4” Cotter Pin

Note: All bolts are part of bolt kit 810903

Copyright © 2023 American Piledriving Equipment, Inc. All Rights Reserved

ROTOTILT SUB-ASM 173043

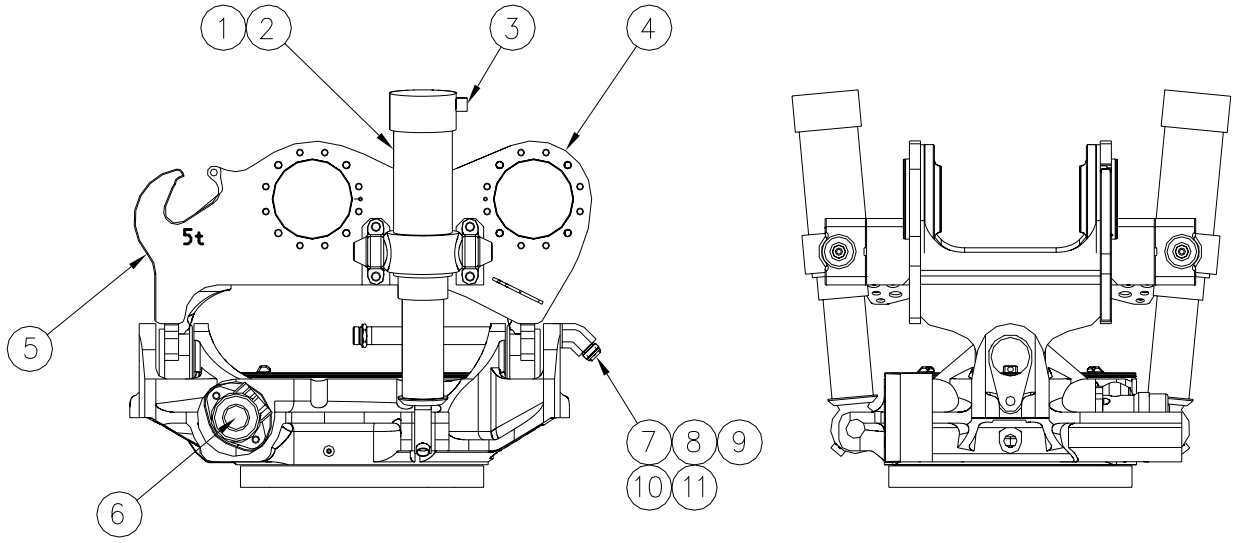

Item	J&M Part Number	Qty.	Description
1	150660	2	Tilt Cylinder
2	150663	1	Cylinder Seal Kit
3	150661	1	Multi Attachment
4	150662	1	Rotor Sub-Asm
5	150437	1	Rotary Motor
6	150355	2	Pipe Asm
7	150363	2	Pipe Clamp
8	150365	2	Clamp Mounting Bar
9	810903	4	5/16 NC X 4-1/2” SHCS
10	810903	4	5/16 Hi Collar Lock Washer
11	150665	1	Spare Parts Kit

	Units (US)	Units (SI)
Min/Max Excavator Wt.	33 - 53 kips	15,000 - 24,000 kg
Tilting Angle	+ / - 40 deg	+ / - 40 deg
Tilting torque at 3000 psi	27,150 ft-lb	36,800 N-m
Rotation	Unlimited	Unlimited
Rate of Rotation (13.2 gpm)	Turn / 7 sec	Turn / 7 sec
Torque at 3000 psi	4090 ft-lb	5540 N-m
Min/Max connecting pressure	2900 - 4350 psi	20 - 30 MPa
Max working pressure	3625 psi	25 MPa
Max return pressure	580 psi	4 MPa
Min/Max connected flow	10.6 - 21.1 gpm	40—80 liter/min

Copyright © 2023 American Piledriving Equipment, Inc. All Rights Reserved

ROTOTILT MULTI ATTACHMENT 150661

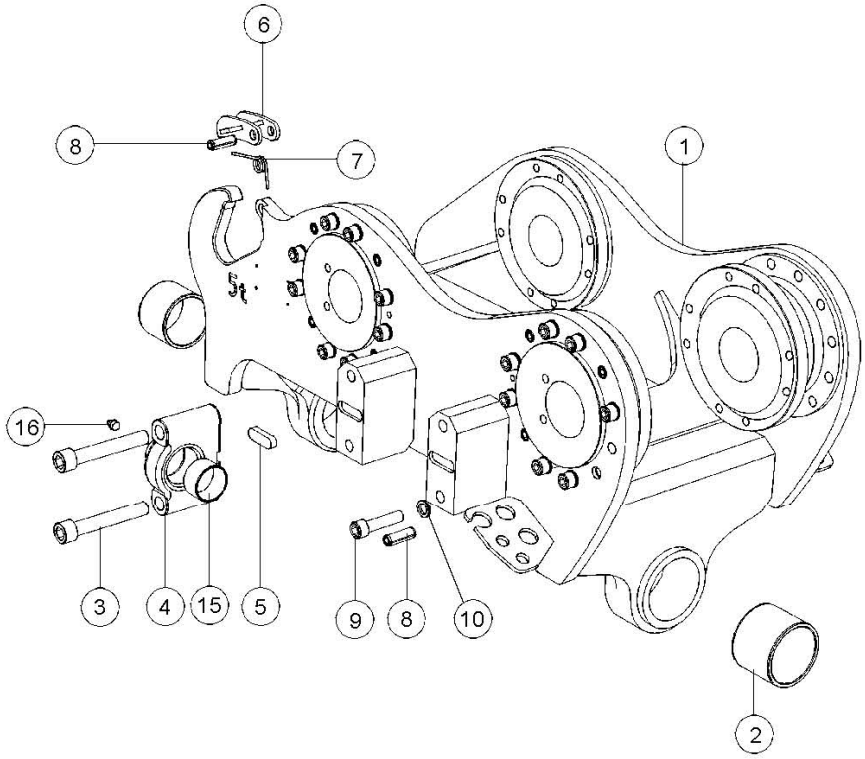

Pos Fig	Detalj nr Part no	Ant Qty	Benämning	Description	Anm Notes
	4100 750		**Multi-infästning A**	**Multi attachment A**	**Pos 2-17**
1	4100 751	1	Multi-infästning A	Multi attachment A	Size; see doc. 1040310
	4100 780		**Multi-infästning B**	**Multi attachment B**	
1	4000 622	1	Multi-infästning B	Multi attachment B	Size; see doc. 1040310
2	4000 622	2	Bussning	Bushing	
3	1022 128	8	Skruv	Screw	MC6S M16x100 12.9
4	4100 503	4	Cylinderinfästning kompl	Cylinder bracket complete	
5	1022 938	4	Kil	Wedge	
6	4100 827	1	Låsbygel	Locking hoop	
7	1009 752	1	Vridfjäder lyftkrok	Spring lifting hook	
8	1008 291	17	Spännstift	Roll pin	
9	1014 950	32	Skruv	Screw	MC6S M12x45 12.9
10	1015 304	32	Låsbricka	Locking washer	
15	1003 706	4	Bussning	Bushing	Incl. in pos 4
16	1001 825	4	Smörjnippel	Grease nipple	Incl. in pos 4

Copyright © 2023 American Piledriving Equipment, Inc. All Rights Reserved

ROTOTILT SUB-ASM - ROTOR 173043

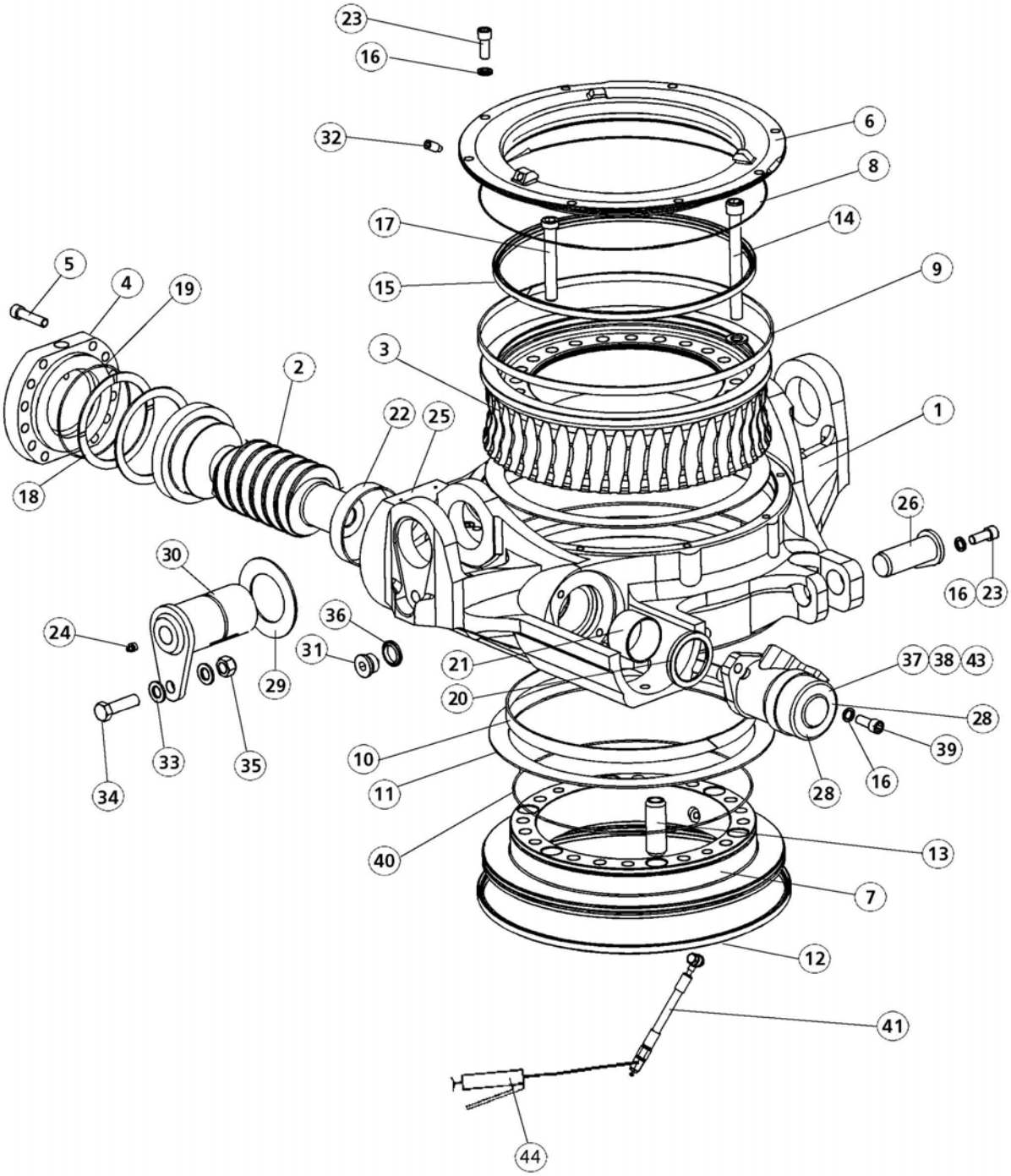

Copyright © 2023 American Piledriving Equipment, Inc. All Rights Reserved

ROTOTILT SUB-ASM - ROTOR 150662

Pos Fig	Detalj nr Part no	Ant Qty	Benämning	Description	Anm Notes
	4100 006		**Rototilt RT 60B**	**Rototilt RT 60B**	
1	4100 967R	1	Hus	Housing	from s/n 5000
2	4100 505	1	Snäckskruv	Worm	
3	4101 014	1	Snäckhjul	Worm gear	
4	4100 008R	1	Gavel	Cover	
5	1016 203	12	Skruv	Screw	MC6S M12X50 12.9
6	4100 012R	1	Lock	Top cover	
7	4100 968	1	Adapter platta	Adapter	
8	1024 355	1	O-ring	O-ring	400 x 2
9	4100 021	1	Glidring	Glide ring	
10	4100 020	1	Glidring	Glide ring	
11	4100 019	2	Glidskiva	Glide plate	
12	1011 394	1	Avstrykare	Wiper seal	from s/n 5000
13	1024 472	6	Spännstift	Pin	
14	1024 371	22	Skruv	Screw	MC6S M16x160 12.9
15	1011 386	1	Avstrykare	Wiper seal	from s/n 5000
16	1015 304	12	Låsbricka	Locking washer	
17	1024 348	2	Skruv	Screw	MLC6S M16x110 8.8
18	4100 023	2	Glidskiva	Glide plate	
19	1024 025	1	O-ring	O-ring	135 x 2,5
20	1024 306	1	Radialtätning	Seal	
21	1024 256	1	Glidlager	Glide bearing	60x65x40
22	4100 022	1	Glidlager	Glide bearing	110x115x25
23	1008 101	10	Skruv	Screw	MC6S M12x30 12.9
24	1001 825	2	Smörjnippel	Grease nipple	
25	4100 500	1	Typskylt	Ser. no. plate	
26	4000 020R	2	Tapp	Pin	Ø35
27	1015 586	3	Smörjmedel	Grease	
28	1009 406R	1	Hydraulmotor	Hydraulic engine	from s/n 3841
29	4000 396	2	Lagerbricka	Washer	
30	4100 017R	2	Tiltaxel	Pin	Ø70
31	1024 298	1	Magnetplugg	Magnetic plug	
32	1018 720	1	Stoppskruv	Screw	T6SS M12x25
33	1003 136	26	Bricka	Washer	17x30x3
34	1020 882	2	Skruv	Screw	M6S M16X55
35	1002 203	2	Låsmutter	Locking nut	
36	1005 354	1	Gummistålbricka	Bonded seal	G 3/4
37	1024 405	2	Vinkel	Adapter	90°, G 1/2x3/8
38	1010 974	2	Huv	Cup	G 3/8, female
39	1015 478	2	Skruv	Screw	MC6S 12x40 12.9
40	1003 987	1	O-ring	O-ring	328x2,5
41	4300 508	1	Smörjslang	Grease hose	From s/n 5195
42	5001 381	5	Rörpropp	Plug	
43	1009 331	1	Packningssats	Seal kit	Motor
44	1037 944	1	Smörjmedel	Grease	Statoil Greaseway LiCa92

Copyright © 2023 American Piledriving Equipment, Inc. All Rights Reserved

LOWER ARM SUB-ASM 150323

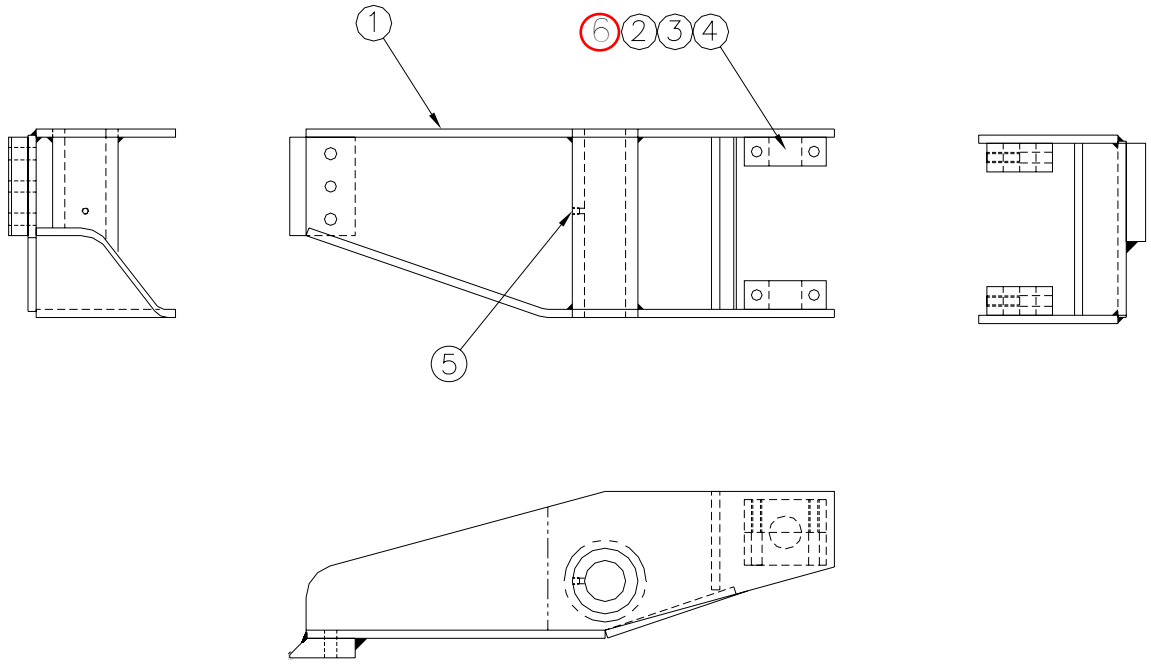

Item	J&M Part Number	Qty.	Description
1	150323	1	Lower Arm Assembly
2	150323J	2	Shaft Clamp Assembly
3	810903	4	5/8-NC X 4-1/2” SHCS
4	810903	4	5/8 Hi Collar Lock
5	100229	1	Washer 1/8 NPT Grease
6	150353	2	Fitting Shaft Spacer

Copyright © 2023 American Piledriving Equipment, Inc. All Rights Reserved

UPPER ARM SUB-ASM 150325

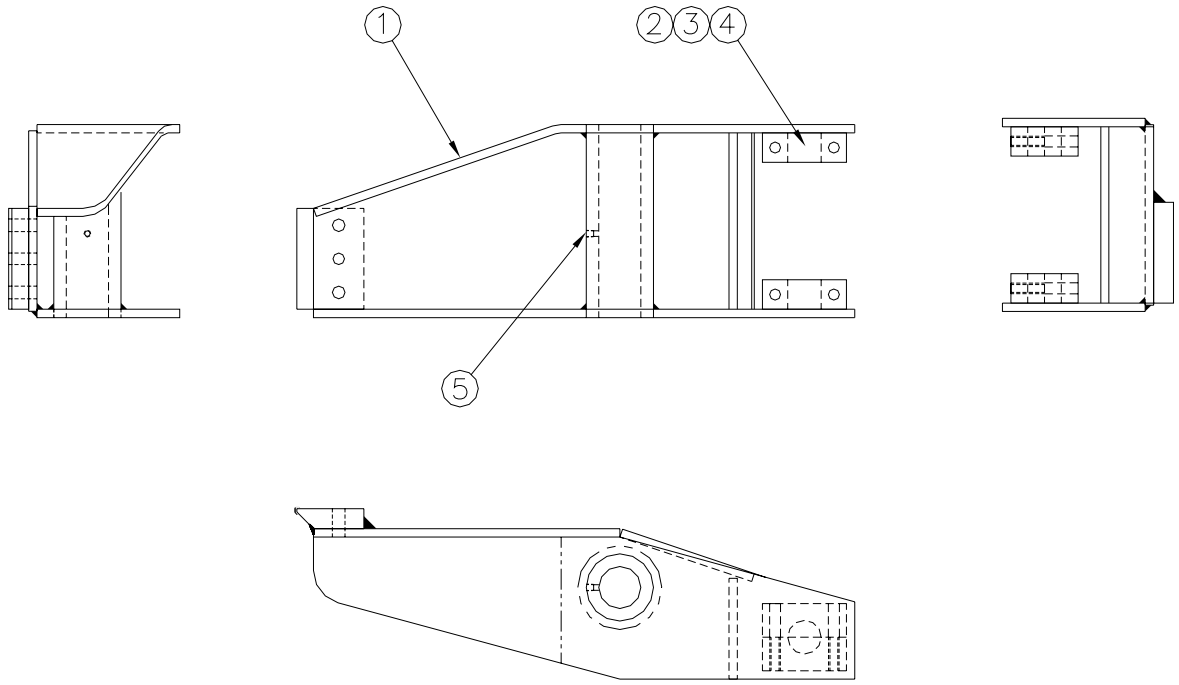

Item	J&M Part Number	Qty.	Description
1	150325	1	Upper Arm Assembly
2	150325J	2	Shaft Clamp Assembly
3	810903	4	5/8-NC X 4-1/2” SHCS
4	810903	4	5/8 Hi Collar Lock Washer
5	100229	1	1/8 NPT Grease Fitting
6	150705	2	Shaft Spacer

Copyright © 2023 American Piledriving Equipment, Inc. All Rights Reserved

BOTTOM CLAMP SUB-ASM 810892

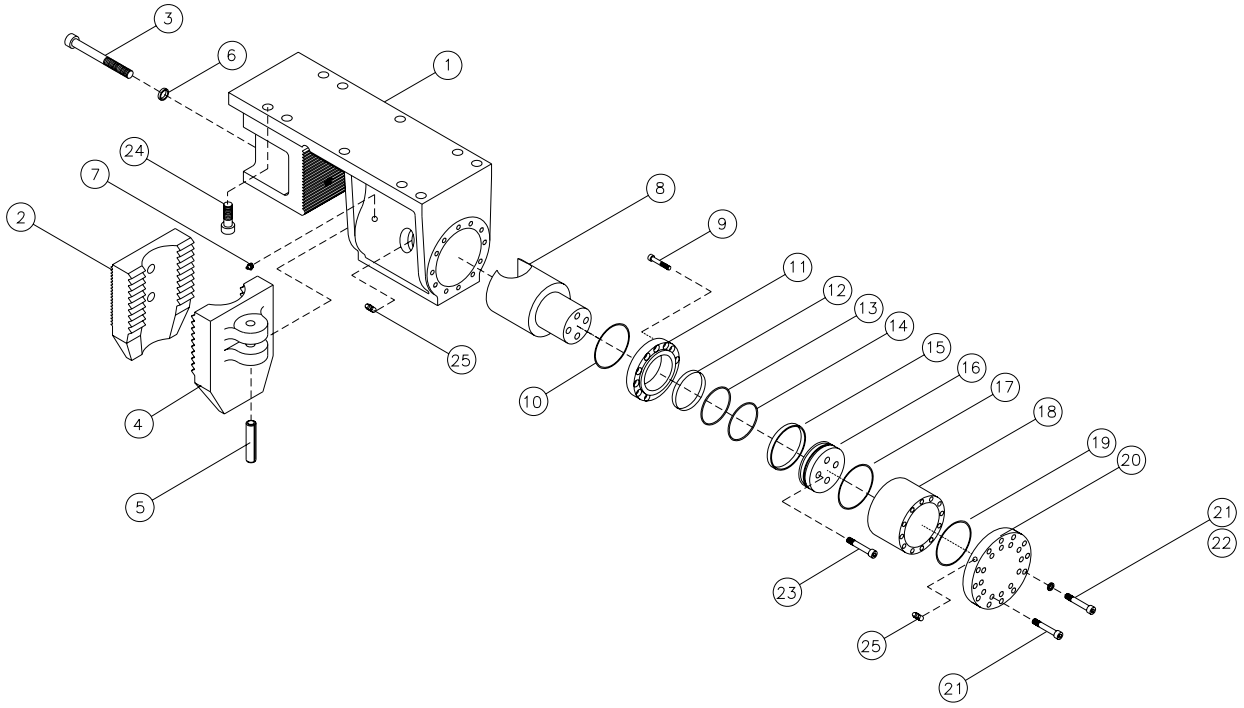

Item	APE P/N	Qty.	Description
1	208109F	1	Model 20 Clamp Casting
2	221011	1	Fixed Jaw
3	Bin Stock	2	1”-8 NC x 9.00 SHCS
4	221005	1	Moveable Jaw
5	221002	2	Jaw Pin
6	Bin Stock	2	1” Hi-Collar Lock Washer
7	211011	1	1/8 NPT Grease Zerk
8	208301	1	Cylinder Rod
9	Bin Stock	12	7/16”-14 NC x 1.25 SHCS
10	208010	1	Parker O-Ring 2-248 w/ Parbak
11	208302	1	Hyd. Cylinder Rod End Cap
12	208010	1	Parker Wear Ring W2-4250-500
13	208010	1	Parker O-Ring 2-345 w/ Parbak
14	208010	1	Parker Rod Wiper SHU-4000
15	208010	1	Parker Wear Ring W2-5000-500
16	208303	1	Piston
17	208010	1	R-5100-80 w/ Expander #349
18	208001	1	Hydraulic Cylinder Shell
19	208010	1	Parker O-Ring 2-248 w/ Parbak
20	208001A	1	Hyd. Cylinder Mounting Flange
21	Bin Stock	24	1/2”-13 NC 0.75 SHCS
22	Bin Stock	12	1/2” Hi-Collar Lock Washer
23	Bin Stock	4	5/8”-11 NC x 1.50 SHCS
24	Bin Stock	10	1”-8 NC x 3.00 SHCS
25	Bin Stock	2	#6 M SAE x #6 M JIC Fitting

All seals are part of APE seal kit 208010

Copyright © 2023 American Piledriving Equipment, Inc. All Rights Reserved

GEARBOX / FRAME SUB-ASM 810899

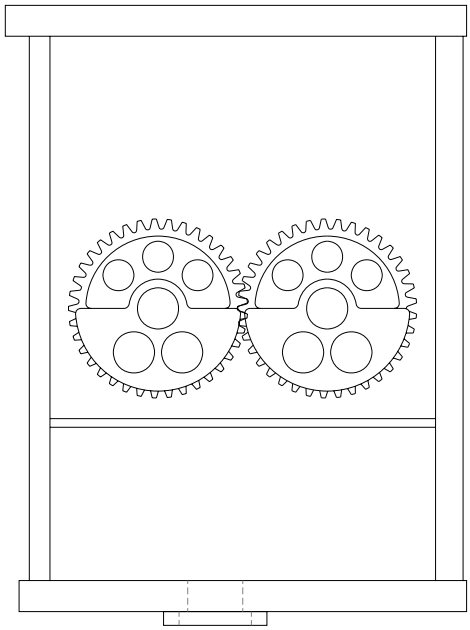

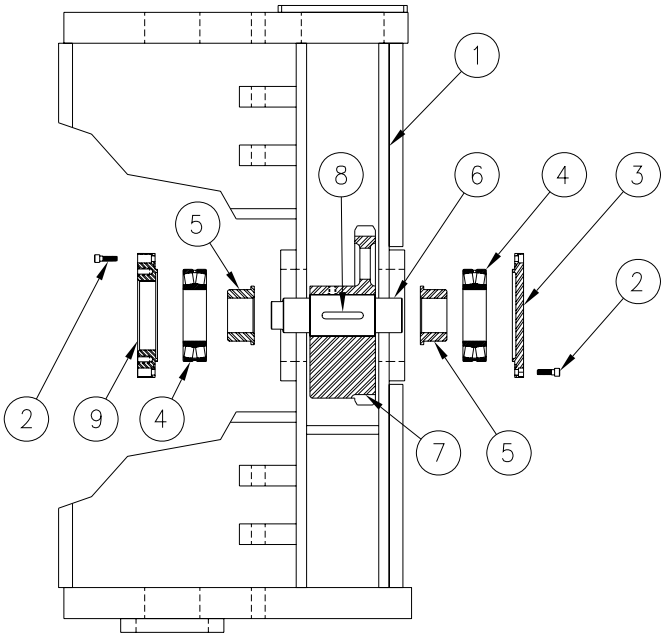

Item	Part Number	Qty.	Description
1	150343 (J&M)	1	Gearbox / Frame
2	Bin Stock	32	3/8-16 NC x 1.25 SHCS
3	133004 (APE)	3	Eccentric Bearing Cover
4	133001 (APE)	4	FAG 22219 Roller Bearing
5	133005(APE)	4	Bearing Sleeve
6	133003S (APE)	2	Eccentric Shaft
7	133007S (APE)	2	One-piece Gear / Eccentric
8	133011 (APE)	2	Eccentric Key
9	133009 (APE)	1	Motor Bearing Cover

All seals are part of APE seal kit 33EX

Copyright © 2023 American Piledriving Equipment, Inc. All Rights Reserved

POSITECH ROTARY MANIFOLD (RM-5G12-5H) 173045

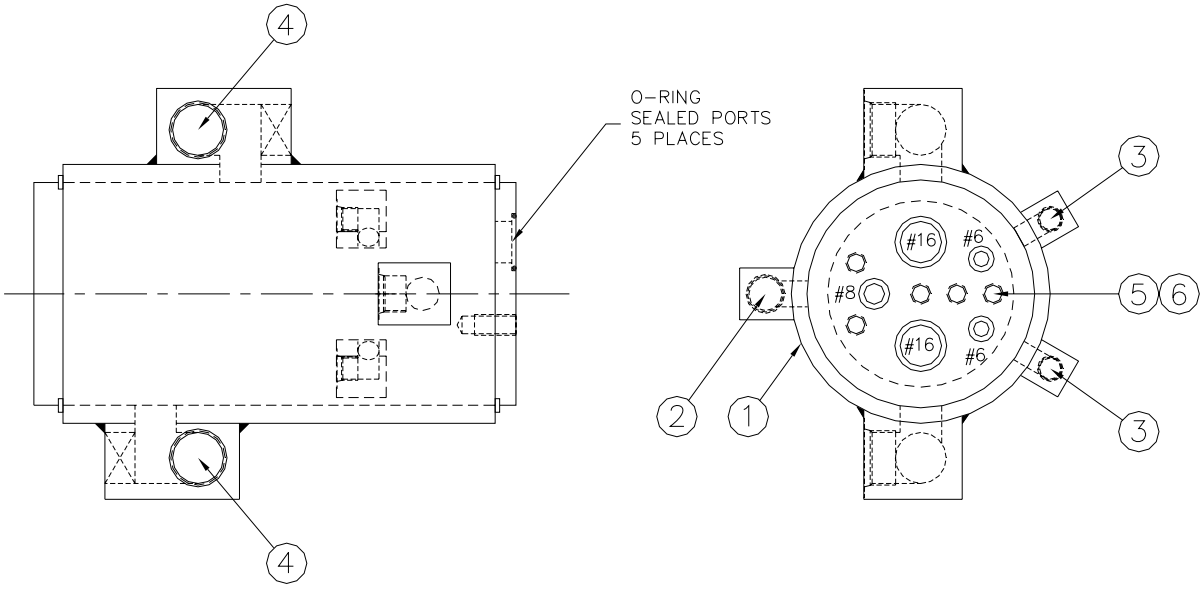

Item	J&M Part Number	Qty.	Description
1	173045	1	Manifold Housing
2	150710	1	6801 6X8 MJIC X M-ORING 90
3	150710	2	6400 6X6 MJIC X M-ORING
4	150710	2	Pipe Assembly (Port)
5	810903	5	1/2-NC X 2-1/2" SHCS
6	810903	5	1/2 Hi Collar Lock

Note: All bolts are part of bolt kit 810903
All fittings are part of hose and fitting kit 150710

Copyright © 2023 American Piledriving Equipment, Inc. All Rights Reserved

SUPPRESSOR YOKE 150349

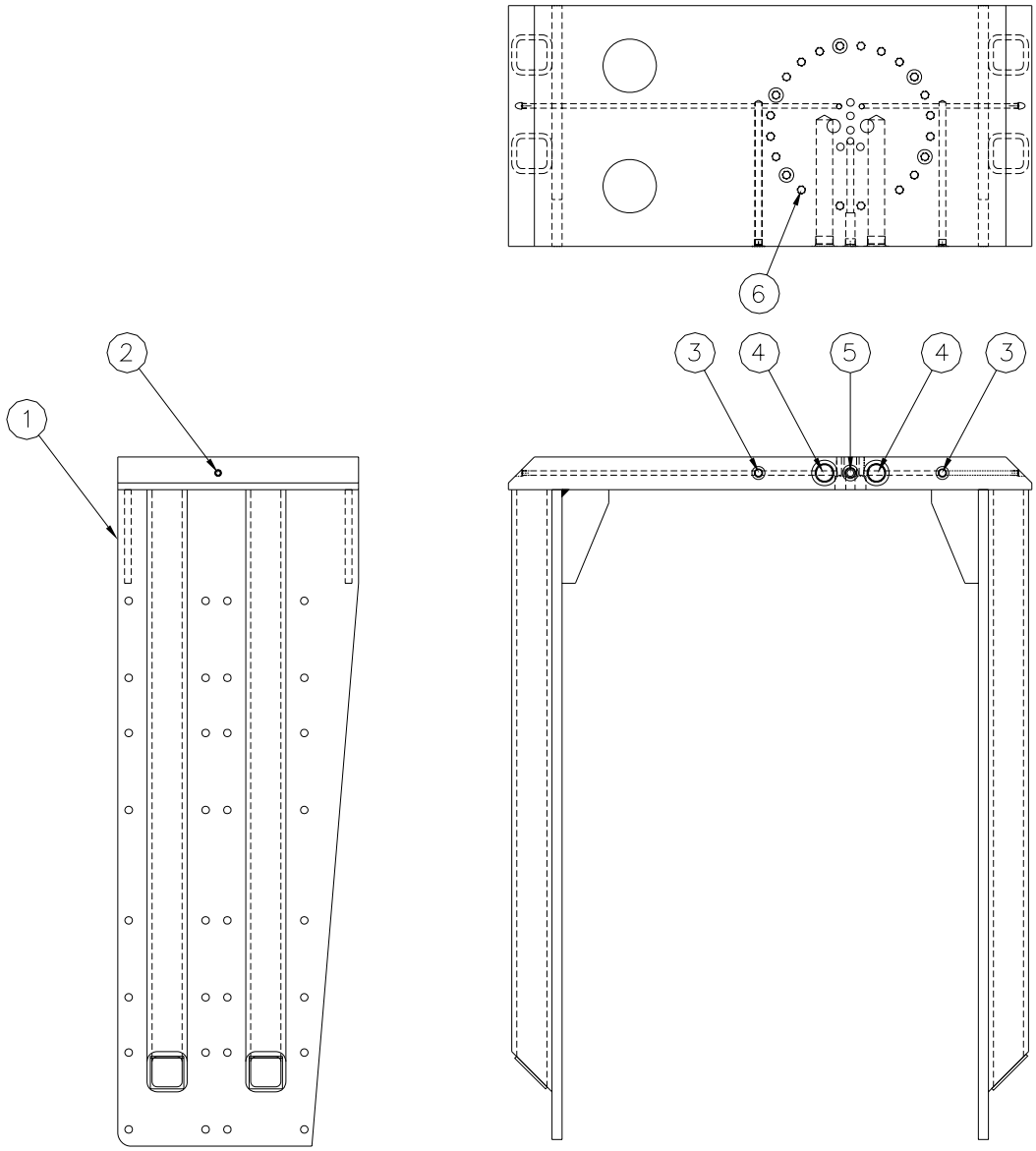

Item	J&M Part Number	Qty.	Description
1	150349	1	Suppressor Yoke
2	100646	2	FITT2P-02P000000-000001
3	100053	2	6400 6X6 MJIC X M-ORING
4	120045	2	6400 16X16 MJIC X M-ORING
5	150710	1	6400 6X8 MJIC X M-ORING
6	810903	22	5/8-NC X 6-1/2” SHCS

Copyright © 2023 American Piledriving Equipment, Inc. All Rights Reserved

ARM CLAMP CYLINDER SUB-ASM 810897

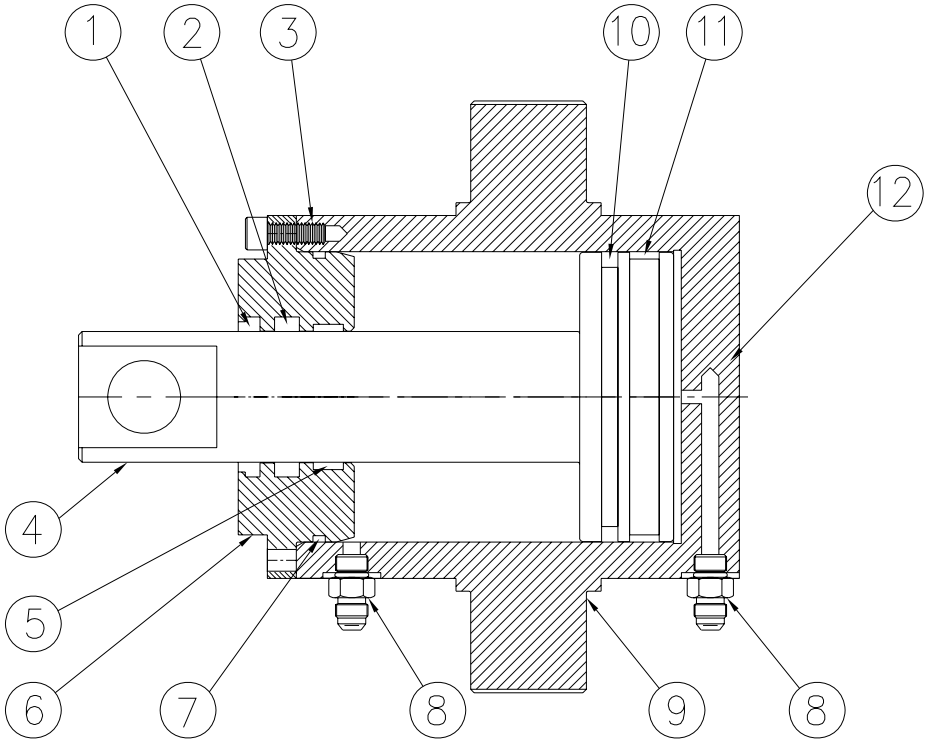

Item	J&M Part Number	Qty.	Description
1	150681	1	Rod Wiper #SHU-2250
2	150683	1	Polypak #25002250-375
3	100051	12	3/8 NC X 1” SHCS
4	150645	1	Piston / Rod
5	150685	1	Rod Wear Band #W2-2500-500
6	150649	1	Cylinder Gland
7	150687	1	O-Ring 2-248 w/ Parbak
8	150670	4	6400 6X6 MJIC X M-ORING
9	150659	1	Cylinder Yoke
10	150689	1	Piston Ring R5100-8 & Expander #349
11	150690	1	Wear Ring #W-2-5000-500

Note: All Seals, Wipers & Bands are part of Arm Clamp Seal Kit 810905

Copyright © 2023 American Piledriving Equipment, Inc. All Rights Reserved

ROBOVIBE HOSE KIT 810902

Item	Qty.	Description
1	1	1” X 61” C13 REG COVER C/W 16 FJX E/E
2	1	1” X 66” C13 REG COVER C/W 16 FJX E/E
3	1	3/8” X 64” CPB C/W 6FJX E/E
4	1	3/8 X 44” CPB C/W 6FJX E/E
5	3	3/8 X 32” CPB C/W 6FJX E/E
6	2	3/8 X 41” CPB C/W 6FJX E/E
7	1	3/8 X 39” CPB C/W 6FJX E/E
8	3	3/8 X 36” CPB C/W 6FJX E/E
9	1	3/8 X 48” CPB C/W 6FJX E/E

ROBOVIBE FITTING KIT 810906

Item	Qty.	Description
1	4	6400 16X16 MJIC X M-ORING
2	9	6400 6X6 MJIC X M-ORING
3	8	6801 6X6 MJIC X M-ORING 90
4	11	6500 6X6 MJIC X FJIC 90
5	5	6502 6X6 MJIC X FJIC 45
6	5	2701 6X6 MJIC UNION BULK HEAD w/306-6
7	1	6801 6X8 MJIC X M-ORING 90
8	1	2406 6X8 FJIC X MJIC ADAPTER
9	1	5406 HP 16 ALLEN HEAD PIPE PLUG
10	1	5406 HP 8 ALLEN HEAD PIPE PLUG
11	2	2404 6X6 MJIC X M-PIPE
12	1	6400 6X4 MJIC X M-ORING
13	2	7005 8 X 18 MJIC XM METRIC w/ BONDING RING
14	2	6 JIC 6 MBSPP W/ BONDING RING 7002 6X6
15	4	6803 6X6X6 ORING RUN TEE

Copyright © 2023 American Piledriving Equipment, Inc. All Rights Reserved

ROBOVIBE BOLT KIT 810903

Item	Qty.	Description	Used For
1	22	5/8 NC X 6-1/2” SHCS	Rototilt to Suppressor Yoke
2	2	Super Nut SJX-175-12/W	Clamp Arm Mount (Inside)
3	20	3/4 X 3” Spiral Roll Pin	Numerous Locations
4	2	7/16 X 3” Roll Pin	Moveable Jaw (Bottom Clamp)
5	2	5/8 NC x 2-1/2” SHCS	Moveable Arm Jaws
6	5	1/2 NC X 2-1/2” SHCS	Rotary Manifold Mount
7	5	1/2 Hi-Collar Lock Washer	Rotary Manifold Mount
8	8	5/8 NC X 2-12/ SHCS	Arm Cylinder Brackets
9	8	5/8 Hi-Collar Lock Washer	Arm Cylinder Brackets
10	8	7/16 NC X 2” SHCS	Vibro Motor Manifold(s)
11	8	7/16 Hi-Collar Lock Washer	Vibro Motor Manifold(s)
12	4	5/16 NC X 4-1/2” Hex Bolt	Pressure / Return Pipe Bracket
13	4	5/16 Washer	Pressure / Return Pipe Bracket
14	4	5/16 Nylock Nut	Pressure / Return Pipe Bracket
15	28	1/2 NC X 2” SHCS	Elastomers (Inner Side)
16	64	1/2 NC X 1” SHCS	Elastomers (Outer Side)
17	36	1/2 NC X 1-1/4”	Elastomers (Inner Side)
18	64	1/2” Stover Nut	Elastomers (Outer Side)

ROBOVIBE SEAL KIT- BOTTOM CLAMP 810904

Item	Qty.	Description	Mfg	Mfg. Description
1	1	Piston Seal w/ Expander	T-Lon	PR-06000-60B TFE Bronze
2	2	Piston Wear Band	Hallite	W06000-0750
3	1	Rod Wiper	Parker	959-35
4	1	Rod Wear Band	Hallite	W04000-0750 E034Z
5	1	Rod Polypak	Parker	P-25003750-375B
6	1	Gland O-Ring	Parker	2-256-NBR-70
7	1	Gland Back-up Ring	Parco Inc.	8-256 Contoured Nitrile Ring

ROBOVIBE SEAL KIT– ARM CLAMP 810905

Item	Qty.	Description	Mfg	Mfg. Description
1	1	Rod Wiper	Parker	SHU-2250
2	1	Rod Polypak	Parker	25002250-375
3	1	Rod Wear Band	Parker	W2-2500-500
4	1	Gland O-Ring w/ Parbak	Parker	2-248
5	1	Piston Seal w/ Expander	Parker	R5100-8 & expander 349
6	1	Piston Wear Band	Parker	W-2-5000-500

Copyright © 2023 American Piledriving Equipment, Inc. All Rights Reserved

ROBOVIBE LOOSE ITEMS

JOYSTICK 150383

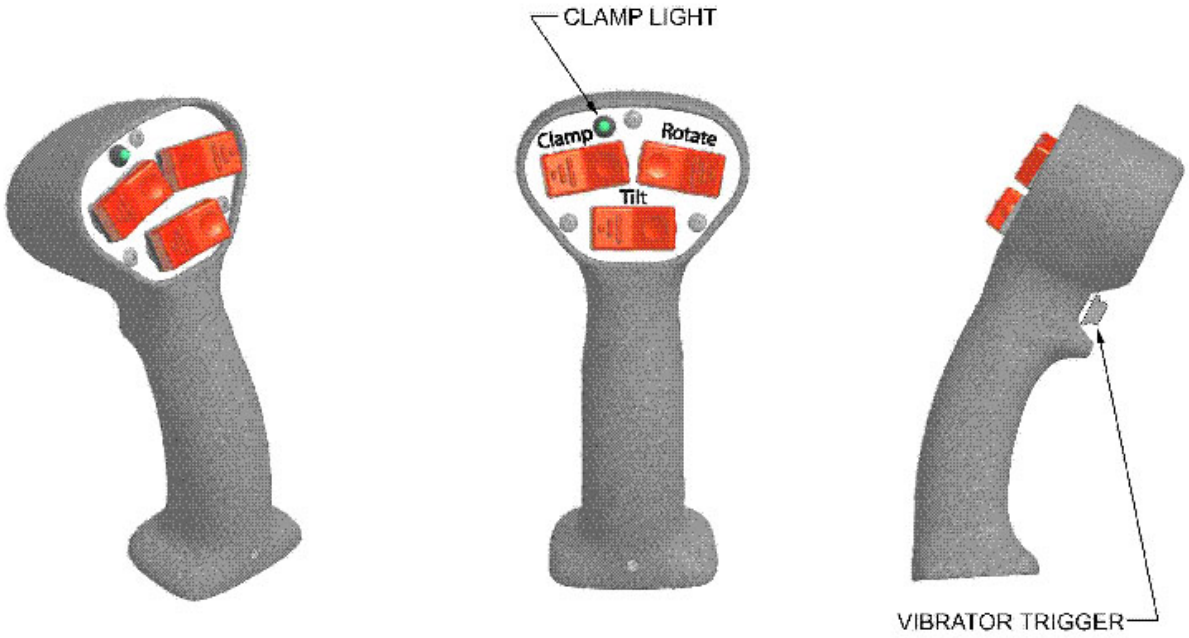

JOY STICK HANDLE

Item	J&M Part Number	Qty.	Description
1	150383	1	RB Hand Grip / Joystick
2	150385	1	Stud Adaptor

Copyright © 2023 American Piledriving Equipment, Inc. All Rights Reserved

J-BOX

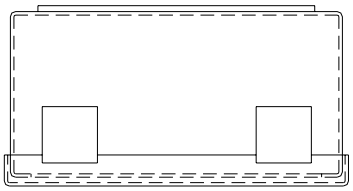

TOP VIEW

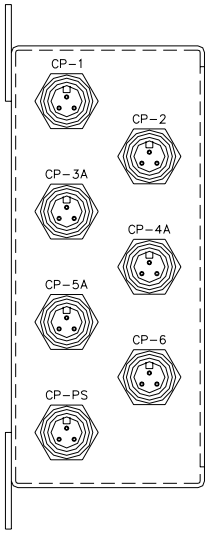

LEFT SIDE VIEW
DOOR REMOVED

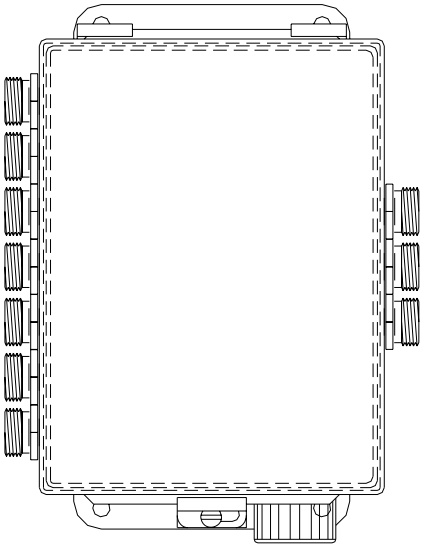

J BOX – FRONT VIEW

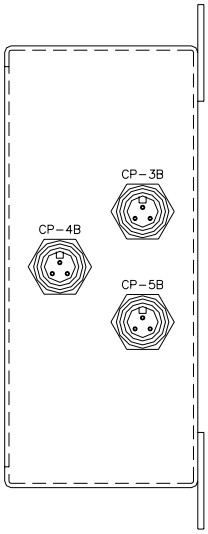

RIGHT SIDE VIEW
DOOR REMOVED

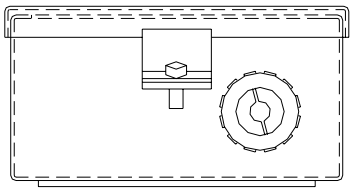

BOTTOM VIEW

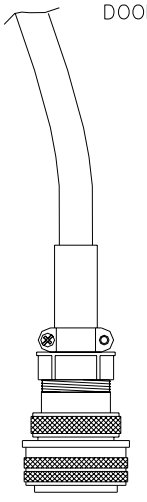

20 FOOT CABLE
TO RELAY PANEL

Copyright © 2023 American Piledriving Equipment, Inc. All Rights Reserved

RELAY PANEL

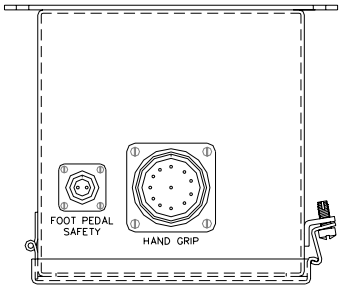

TOP VIEW

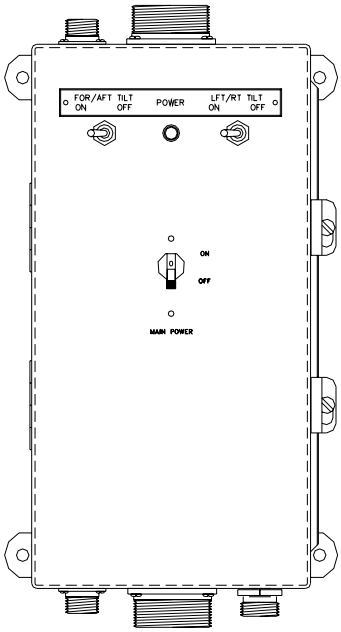

RELAY PANEL – FRONT VIEW

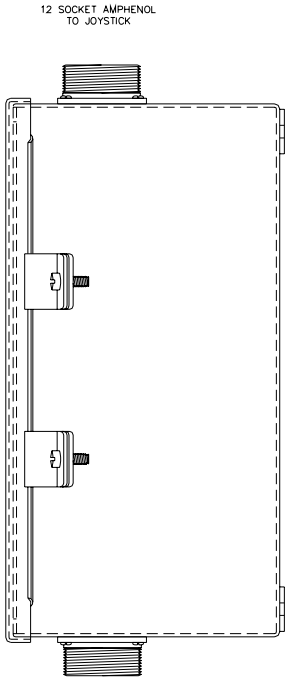

SIDE VIEW

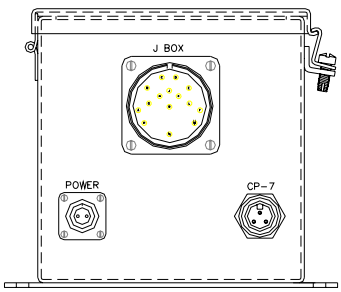

BOTTOM VIEW

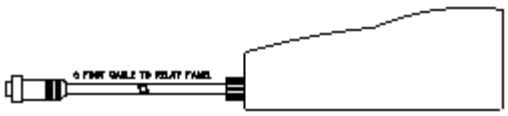

FOOT SWITCH

Copyright © 2023 American Piledriving Equipment, Inc. All Rights Reserved

ELECTRICAL SCHEMATIC

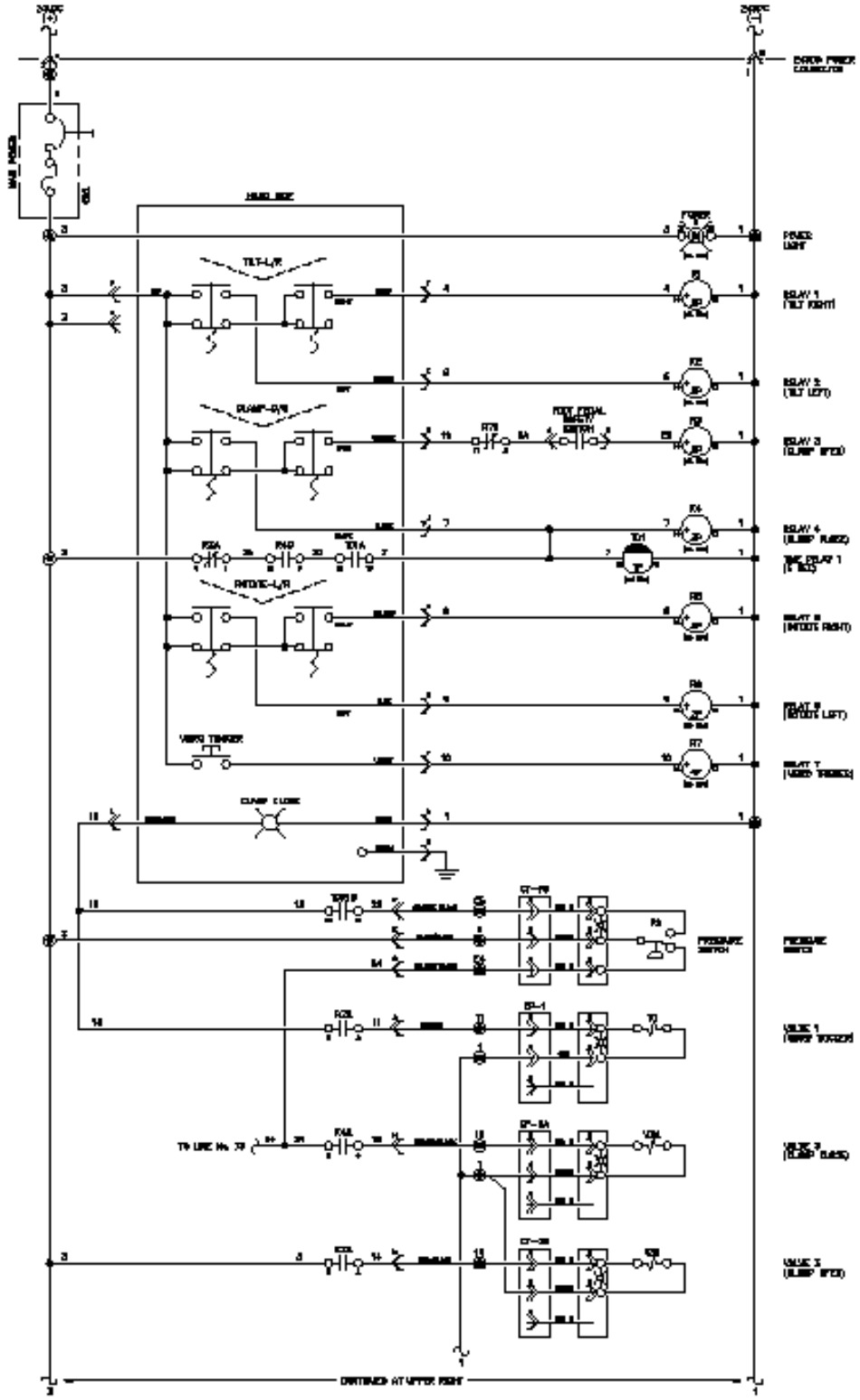

Copyright © 2023 American Piledriving Equipment, Inc. All Rights Reserved

ELECTRICAL SCHEMATIC - CONT.

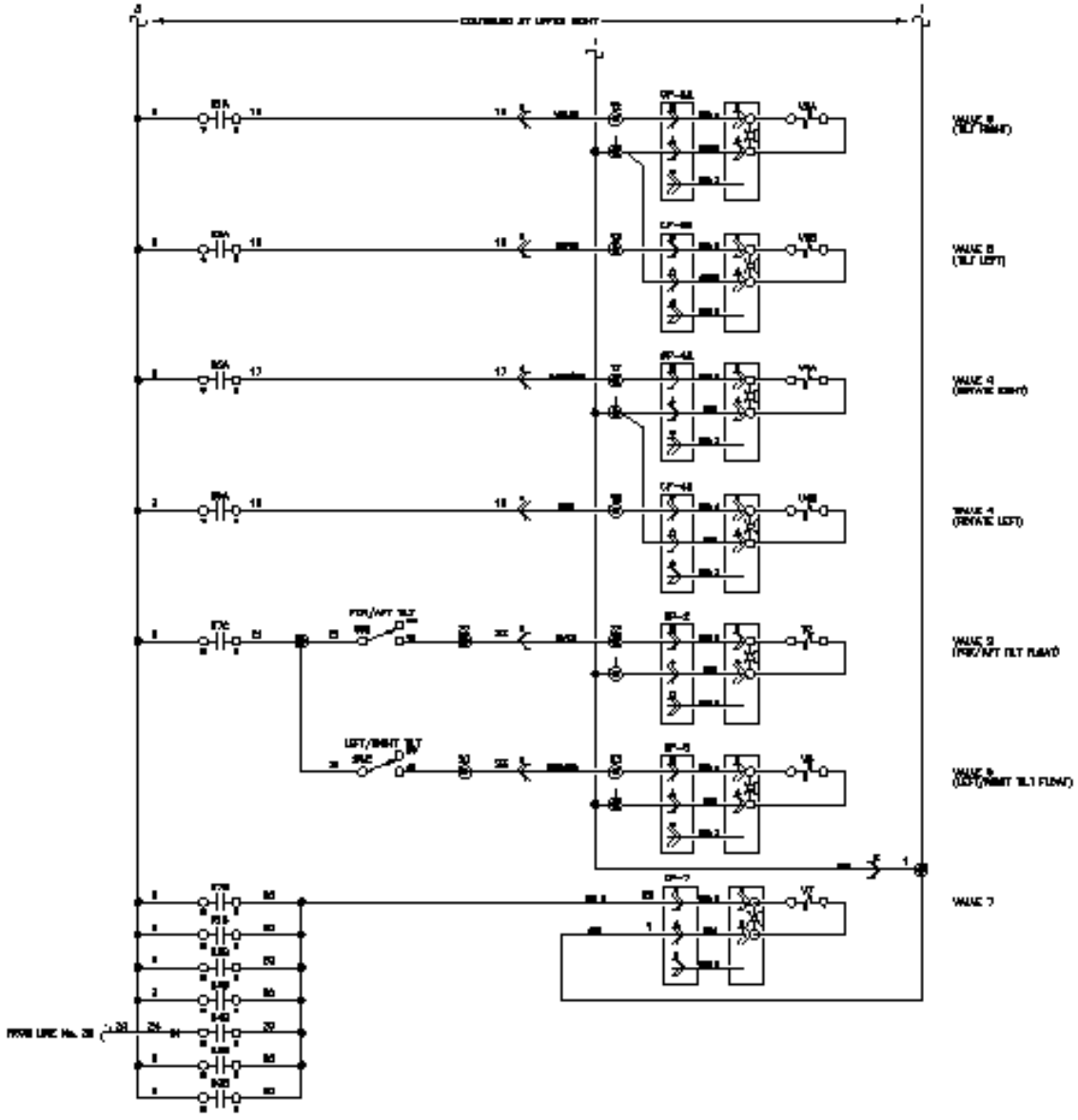

Copyright © 2023 American Piledriving Equipment, Inc. All Rights Reserved

HYDRAULIC MANIFOLD 173049

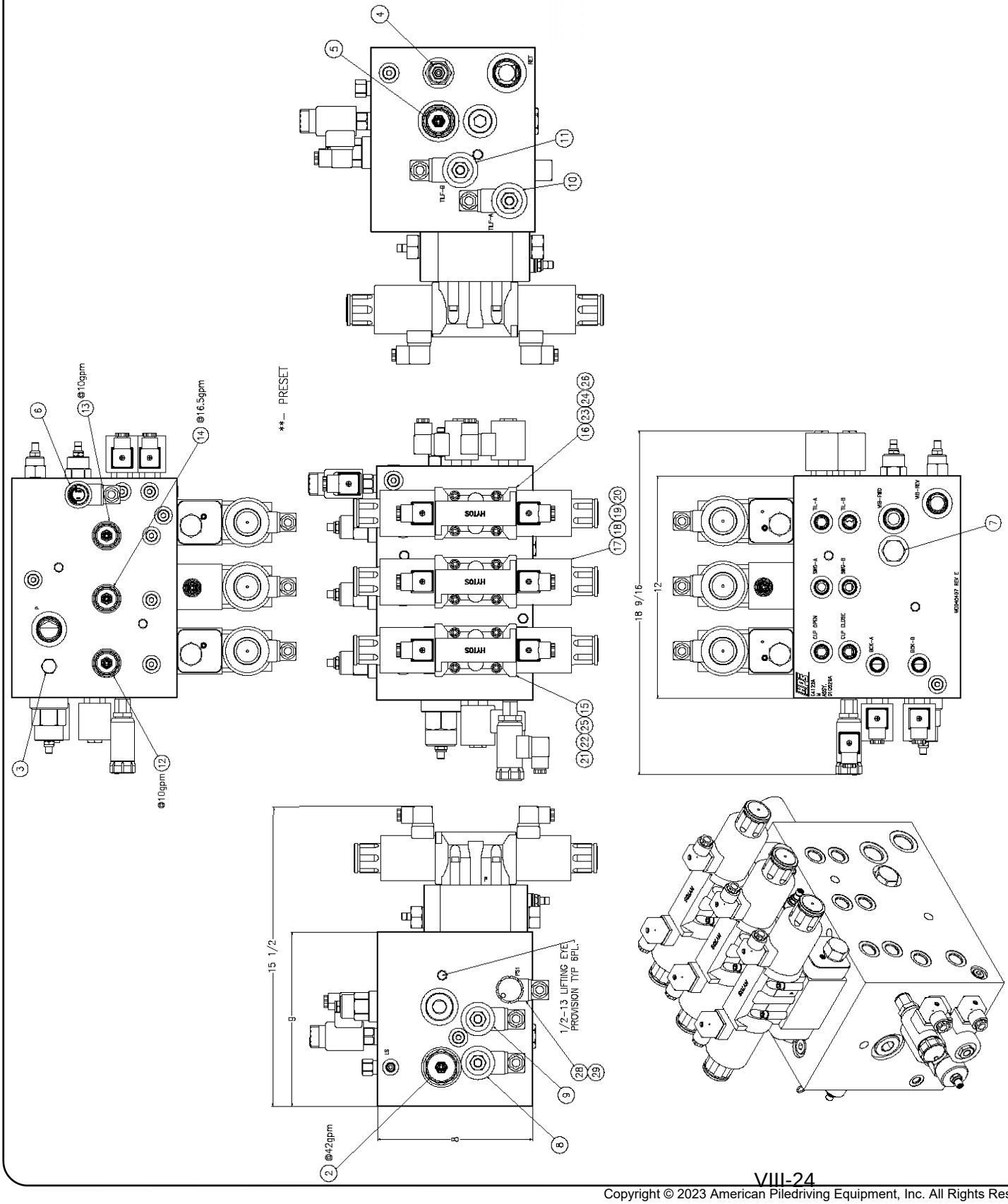

Copyright © 2023 American Piledriving Equipment, Inc. All Rights Reserved

HYDRAULIC MANIFOLD 173049

Item	Qty.	Description	Vendor	Vendor P/N
1	1	Manifold	HPS	E4122A
2	1	Flow Control	SUN	FDFA-LAN @ 42 GPM
3	1	Check Valve	SUN	CXBA-XCN
4	1	Relief Valve	SUN	RDFA-LWN @ 3500 psi
5	1	Relief Valve	SUN	RVGA-LWN @ 4000 psi
6	1	Solenoid Valve	SUN	DTDA-XCN
6a	1	Coil - 24VDC, DIN	SUN	770-224
7	1	Check Valve	SUN	CXED-XCN
8	1	Solenoid Valve	Hydraforce	SV10-22-0-N-00
8a	1	Coil - 24VDC, DIN	Hydraforce	6356024
9	1	Solenoid Valve	Hydraforce	SV10-22-0-N-00
9a	1	Coil - 24VDC, DIN	Hydraforce	6356024
10	1	Solenoid Valve	Hydraforce	SV10-22-0-N-00
10a	1	Coil - 24VDC, DIN	Hydraforce	6356024
11	1	Solenoid Valve	Hydraforce	SV10-22-0-N-00
11a	1	Coil - 24VDC, DIN	Hydraforce	6356024
12	1	Flow Control	SUN	FDEA-LAN @ 10 GPM
13	1	Flow Control	SUN	FDEA-LAN @ 10 GPM
14	1	Flow Control	SUN	FDEA-LAN @ 16.5 GPM
15	1	Directional Valve	HYTOS	RPE4-103Y11/02400E1
15a	1	Stud Kit	SUN	992-001
16	1	Directional Valve	HYTOS	RPE4-103Y11/02400E1
16a	1	Stud Kit	SUN	992-001
17	1	Directional Valve	HYTOS	RPE4-103Z11/02400E1
17a	1	Stud Kit	SUN	992-001
18	1	Relief Valve	SUN	RDDA-LWN @ 3500 psi
19	1	Relief Valve	SUN	RDDA-LWN @3500 psi
20	1	Sandwich Body	SUN	CJY/S
21	1	P.O. Check Valve	SUN	CKEB-XCN
22	1	P.O. Check Valve	SUN	CKEB-XCN
23	1	P.O. Check Valve	SUN	CKEB-XCN
24	1	P.O. Check Valve	SUN	CKEB-XCN
25	1	Sandwich Body	SUN	BJY/S
26	1	Sandwich Body	SUN	BJY/S
27	11	DIN Connector	HYTOS	936-9905
28	1	Pressure Switch	HYDAC	EDS-505-250-4-1-000
29	1	Adaptor	Parker	4-1/4 F50HG4

Copyright © 2023 American Piledriving Equipment, Inc. All Rights Reserved

MANIFOLD HYDRAULIC CIRCUIT

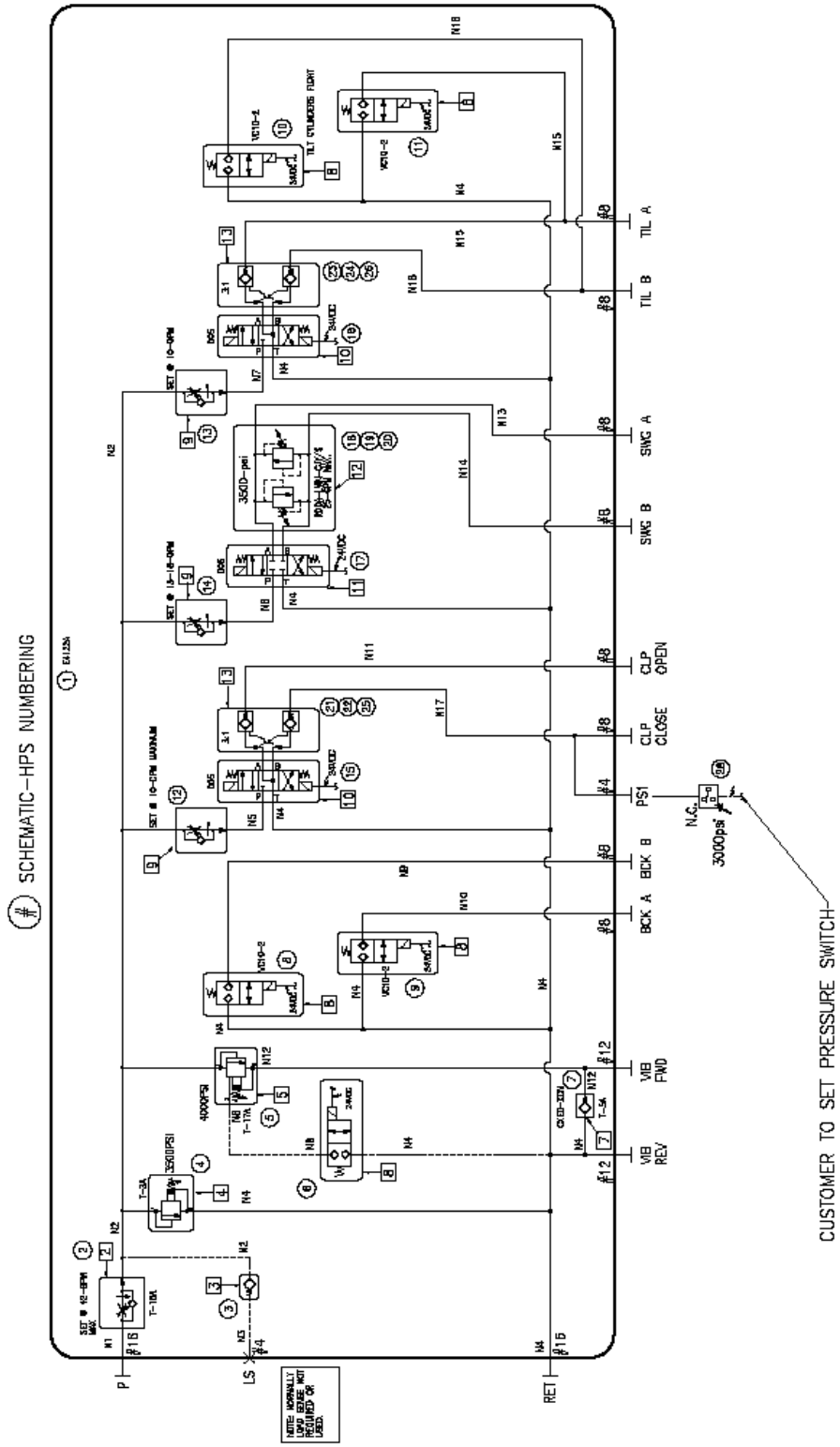

Copyright © 2023 American Piledriving Equipment, Inc. All Rights Reserved

G. RECOMMENDED TIGHTENING TORQUE

Nominal Screw Size	Nominal Socket Size	Tightening Torque Ft-Lbs. (Kg-M)	Nominal Screw Size	Nominal Socket Size	Tightening Torque Ft-Lbs. (Kg-M)
#10-24	5/32	6 Ft-Lbs. (.83 Kg-M)	#10-32	5/32	6 Ft-Lbs. (.83 Kg-M)
1/4-20	3/16	13 Ft-Lbs. (1.8 Kg-M)	1/4-28	3/16	15 Ft-Lbs. (2.1 Kg-M)
5/16-18	1/4	27 Ft-Lbs. (3.7 Kg-M)	5/16-24	1/4	30 Ft-Lbs. (4.2 Kg-M)
3/8-16	5/16	48 Ft-Lbs. (6.6 Kg-M)	3/8-24	5/16	55 Ft-Lbs. (7.6 Kg-M)
7/16-14	3/8	77 Ft-Lbs. (10.6 Kg-M)	7/16-20	3/8	86 Ft-Lbs. (11.9 Kg-M)
1/2-13	3/8	119 Ft-Lbs. (16.4 Kg-M)	1/2-20	3/8	133 Ft-Lbs. (18.4 Kg-M)
5/8-11	1/2	234 Ft-Lbs. (32.3 Kg-M)	5/8-18	1/2	267 Ft-Lbs. (36.9 Kg-M)
3/4-10	5/8	417 Ft-Lbs. (57.6 Kg-M)	3/4-16	5/8	467 Ft-Lbs. (64.5 Kg-M)
7/8-9	3/4	676 Ft-Lbs. (93.4 Kg-M)	7/8-14	3/4	742 Ft-Lbs. (102.5 Kg-M)
1-8	3/4	1,009 Ft-Lbs. (139.4 Kg-M)	1-12	3/4	1,126 Ft-Lbs. (155.6 Kg-M)
1-1/4-7	7/8	1,600 Ft-Lbs. (221.1 Kg-M)	1-1/4-12	7/8	1,800 Ft-Lbs. (248.8 Kg-M)
1-1/2-6	1	2,800 Ft-Lbs. (387 Kg-M)	1-1/2-12	1	3,000 Ft-Lbs. (414.6 Kg-M)

NOTE: These values are for Socket head cap screws only. Button heads, Flat heads and Set screws have different values. Check the Allen Hand Book for correct torque specifications.

Copyright © 2023 American Piledriving Equipment, Inc. All Rights Reserved

ROBOVIBE
VIBRATORY
DRIVER/EXTRACTOR

Copyright © 2023 American Piledriving Equipment, Inc. All Rights Reserved